Parts Catalog

Commercial Vehicle

ape' 501 (5 Seater)

PIAGGIO VEHICLES PRIVATE LIMITED
Registered Office: Bund Garden Road ,Opp. Residency Club , Pune (India)

Print Date: 06-Dec-2019

PLATES INDEX

Sr No.	Plate Name	Plate No.	Page No.
1	ENGINE	1	1-2
2	CRANKCASE ASSEMBLY	2	3-4
3	CYLINDER AND PISTON	3	5-6
4	CRANKSHAFT SUPPORT	4	7-8
5	PTO COVER	5	9-10
6	CYLINDER HEAD & DECOMPRESSION LEVER	6	11-12
7	OIL FILTER & PRESSURE RELIFE VALVE	7	13-14
8	OIL PAN	8	15-16
9	ROCKER ARM COVER	9	17-18
10	LUB OIL PUMP & SPEED GOVERNOR	10	19-20
11	REMOTE THROTILE & STOP CONTROL	11	21-22
12	AIR SHROUD/ FLYWHEEL / PULLEY/ ELECTRIC START SYSTEM COMPONENTS	12	23-26
13	CONNECTING ROD & CRANKSHAFT	13	27-28
14	AIR CLEANER & EXHAUST MUFFLER	14	29-32
15	INJECTOR	15	33-34
16	FUEL PUMP	16	35-36
17	CAM SHAFT, PUSH ROD & ROCKER ARM	17	37-38
18	EXTERNAL FUEL FILTER & FUEL PIPES	18	39-40
19	FEED PUMP	19	41-42
20	AIR_FILTER_MTG_&_ENGINE_HOSE	20	43-44
21	ENGINE_SIDE_COVER_AND_MAIN_HOUSING	21	45-46
22	MAINSHAFT_SPEED_GEARS AND CLUSTER GEAR	22	47-48
23	GEAR_SHIFTER_AND_ITS_CONTROL_MECHANISM	23	49-50
24	CLUTCH_AND_CLUTCH_COVER	25	51-54
25	ENGINE_SUPPORT	26	55-58
26	CHASSIS FRAME, FUEL TANK & SEAT	27	59-62
27	INNER PARTS OF CABIN FOR STD. MODEL	28	63-64
28	REAR SUSPENSION	29	65-68
29	STEERING COLUMN AND FRONT SUSPENSION	30	69-72
30	HANDLE BAR AND CONTROL	31	73-76

PLATES INDEX

Sr No.	Plate Name	Plate No.	Page No.
31	BRAKE - TANDEM MASTER CYLINDER, BRAKE PIPE AND HAND BRAKES	32	77-80
32	ELECTRICAL DEVICES	33	81-86
33	FRONT MUDGAURD AND FRONT FASCIA FOR STD. MODEL	34	87-88
34	PASSENGER AUTO RICKSHAW BODY	35	89-94
35	CABLE HARNESS	36	95-96
36	FRONT BRAKE ASSEMBLY SELF ADJUSTING (DIA 180X40 MM)	37	97-98
37	REAR BRAKE ASSEMBLY SELF ADJUSTING (DIA 180X40 MM)	38	99-100
38	SET PART	39	101-104
39	ALUMINIUM CLUTCH ASSEMBLY	24.A	105-106
40	CLUTCH & COVER ASSEMBLY (FOR ALUMINIUM CLUTCH)	24.B	107-108

PICTORIAL PLATES INDEX

PLATE-1 ENGINE

Page No. :1-2

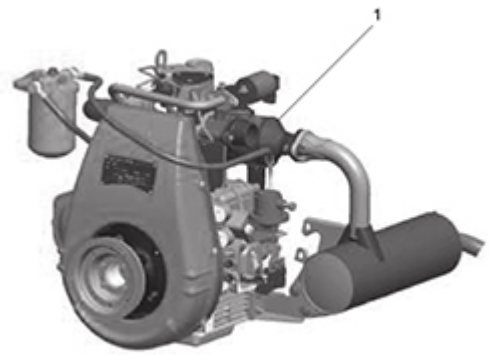

PLATE-2 CRANKCASE ASSEMBLY

Page No. :3-4

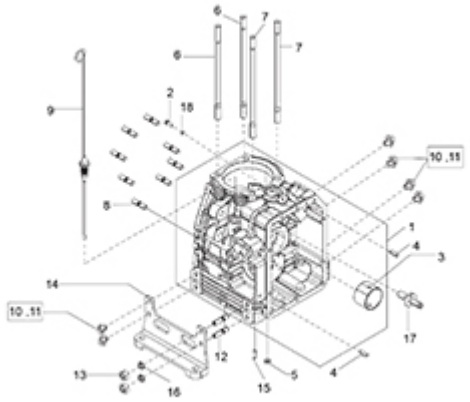

PLATE-3 CYLINDER AND PISTON

Page No. :5-6

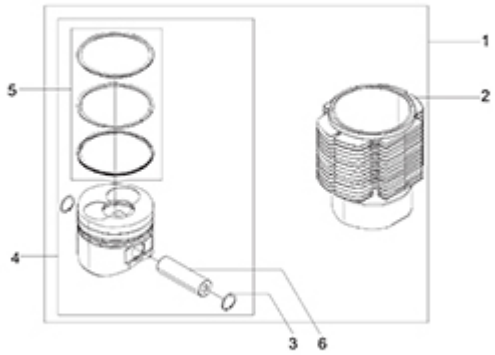

PLATE-4 CRANKSHAFT SUPPORT

Page No. :7-8

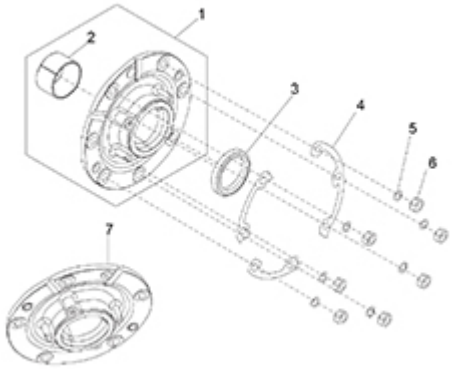

PLATE-5 PTO COVER

Page No. :9-10

PLATE-6 CYLINDER HEAD & DECOMPRESSION LEVER

Page No. :11-12

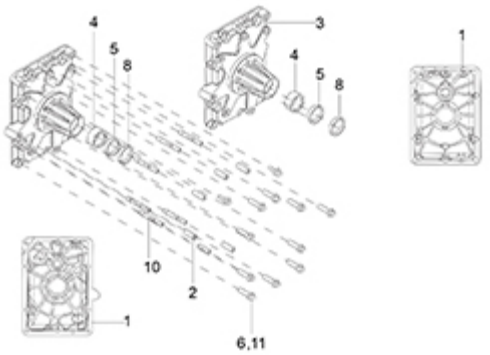

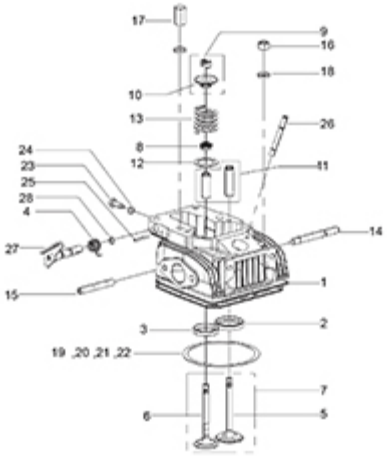

PLATE-7 OIL FILTER & PRESSURE RELIFE VALVE

Page No. :13-14

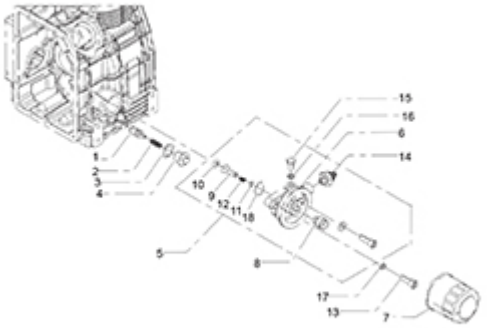

PLATE-8 OIL PAN

Page No. :15-16

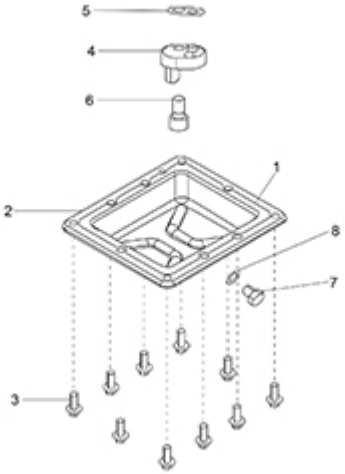

PICTORIAL PLATES INDEX

PLATE-9 ROCKER ARM COVER

Page No. :17-18

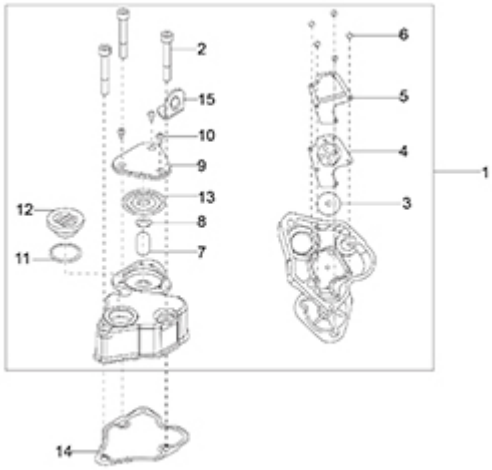

PLATE-10 LUB OIL PUMP & SPEED GOVERNOR

Page No. :19-20

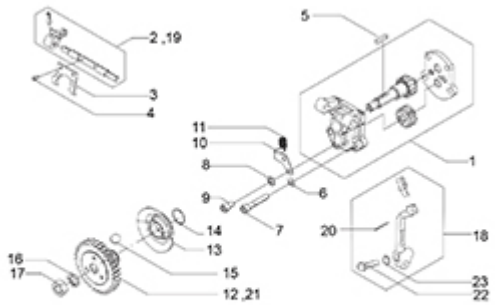

PLATE-11 REMOTE THROTILE & STOP CONTROL

Page No. :21-22

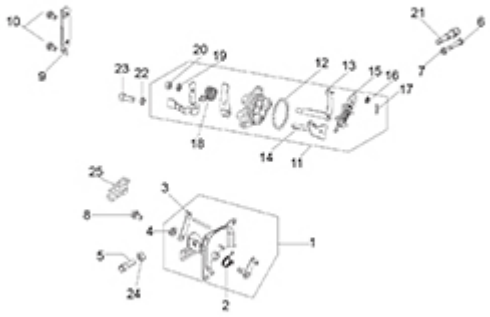

PLATE-12 AIR SHROUD/ FLYWHEEL / PULLEY/ ELECTRIC START SYSTEM COMPONENTS

Page No. :23-26

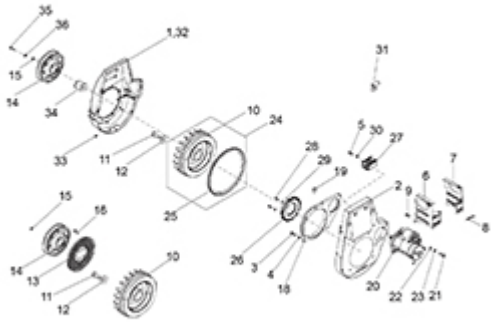

PLATE-13 CONNECTING ROD & CRANKSHAFT

Page No. :27-28

PLATE-14 AIR CLEANER & EXHAUST MUFFLER

Page No. :29-32

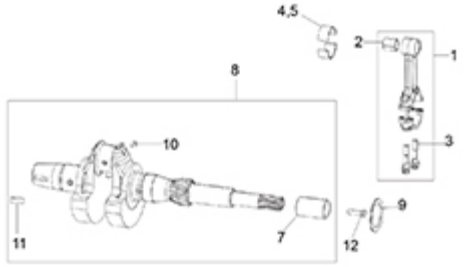

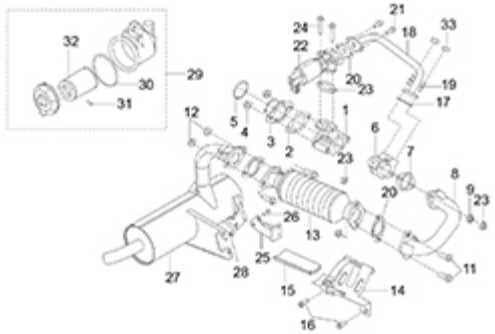

PLATE-15 INJECTOR

Page No. :33-34

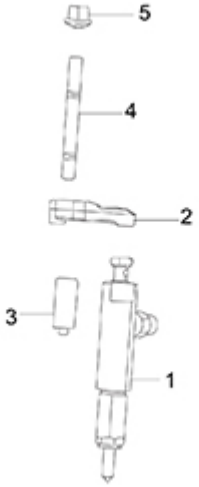

PLATE-16 FUEL PUMP

Page No. :35-36

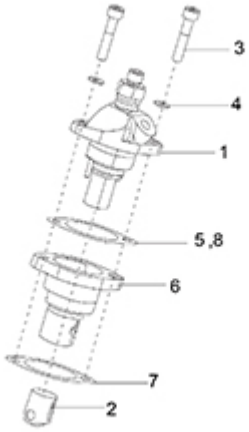

PICTORIAL PLATES INDEX

PLATE-17 CAM SHAFT, PUSH ROD & ROCKER ARM

Page No. :37-38

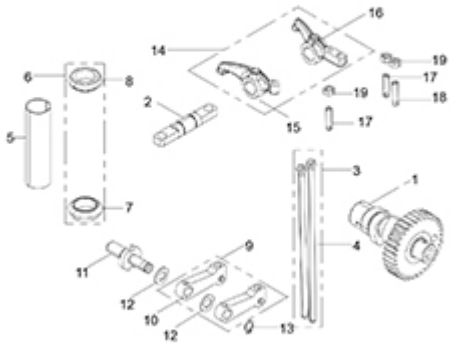

PLATE-18 EXTERNAL FUEL FILTER & FUEL PIPES

Page No. :39-40

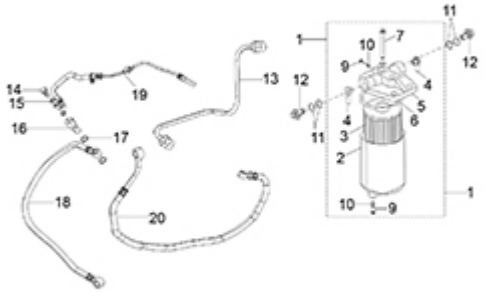

PLATE-19 FEED PUMP

Page No. :41-42

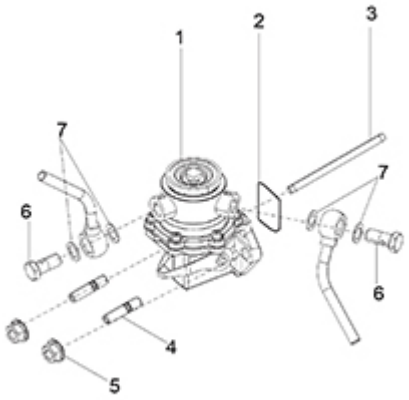

PLATE-20 AIR_FILTER_MTG_&_ENGINE_HOSE

Page No. :43-44

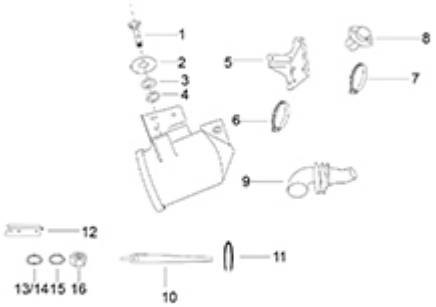

PLATE-21 ENGINE_SIDE_COVER_AND_MAIN_HOUSING

Page No. :45-46

PLATE-22 MAINSHAFT_SPEED_GEARS AND CLUSTER GEAR

Page No. :47-48

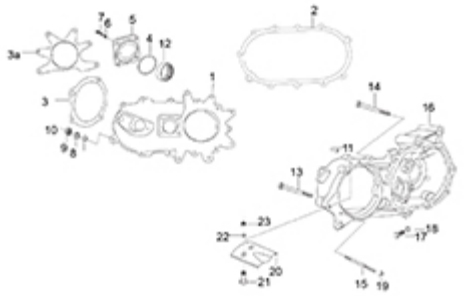

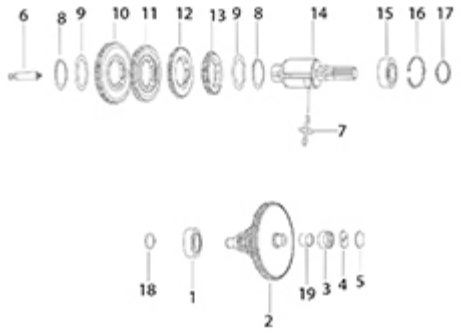

PLATE-GEAR_SHIFTER_AND_ITS_CONTROL_MECHANISM 23

Page No. :49-50

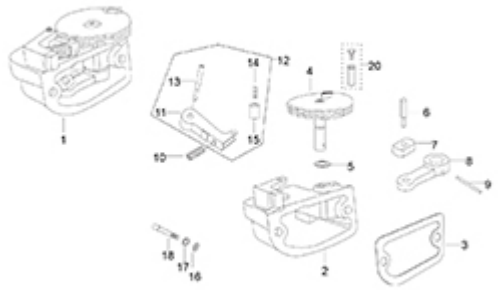

PLATE-25 CLUTCH_AND_CLUTCH_COVER

Page No. :51-54

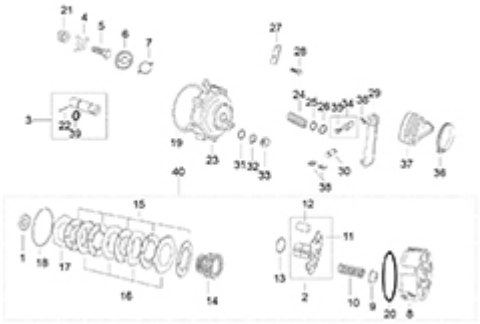

PICTORIAL PLATES INDEX

PLATE-26 ENGINE_SUPPORT

Page No. :55-58

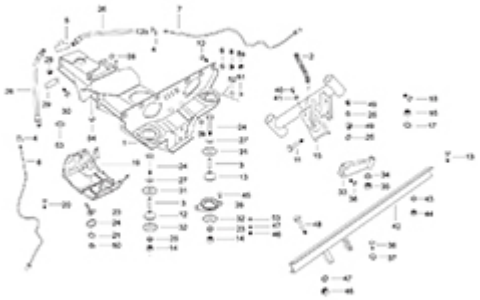

PLATE-27 CHASSIS FRAME, FUEL TANK & SEAT

Page No. :59-62

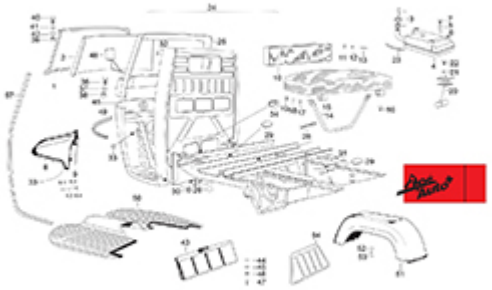

PLATE-28 INNER PARTS OF CABIN FOR STD. MODEL

Page No. :63-64

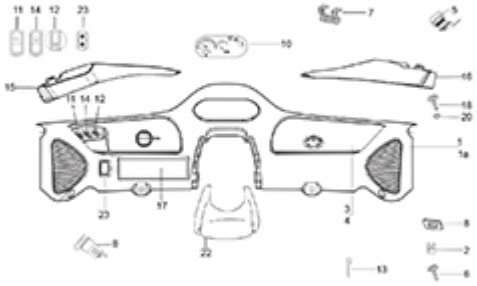

PLATE-29 REAR SUSPENSION

Page No. :65-68

PLATE-30 STEERING COLUMN AND FRONT SUSPENSION

Page No. :69-72

PLATE-31 HANDLE BAR AND CONTROL

Page No. :73-76

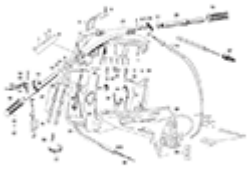

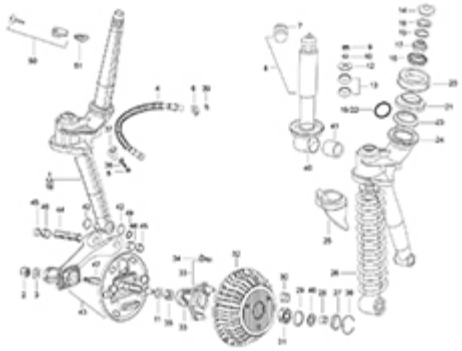

PLATE-32 BRAKE - TANDEM MASTER CYLINDER, BRAKE PIPE AND HAND BRAKES

Page No. :77-80

PLATE-33 ELECTRICAL DEVICES

Page No. :81-86

PICTORIAL PLATES INDEX

PLATE-34 FRONT MUDGAURD AND FRONT FASCIA FOR STD. MODEL

Page No. :87-88

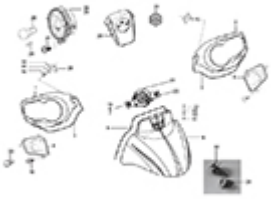

PLATE-35 PASSENGER AUTO RICKSHAW BODY

Page No. :89-94

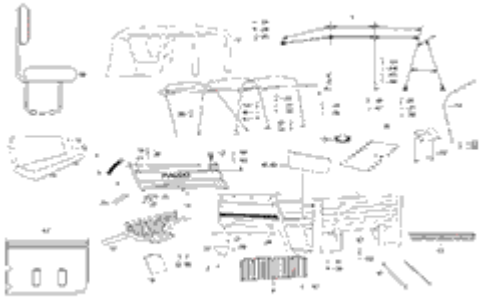

PLATE-36 CABLE HARNESS

Page No. :95-96

PLATE-37 FRONT BRAKE ASSEMBLY SELF ADJUSTING (DIA 180X40 MM)

Page No. :97-98

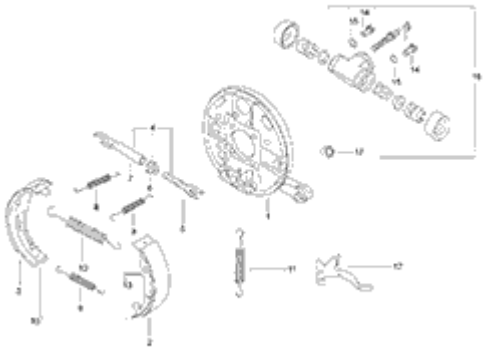

PLATE-38 REAR BRAKE ASSEMBLY SELF ADJUSTING (DIA 180X40 MM)

Page No. :99-100

PLATE-39 SET PART

Page No. :101-104

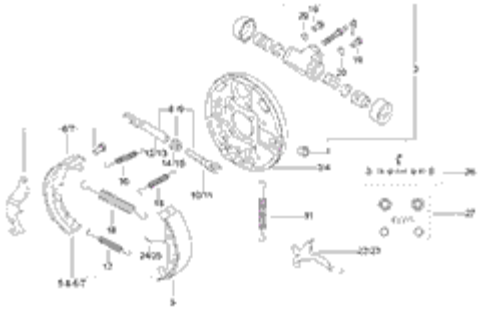

IMAGE NOT AVAILABLE

PLATE-24.A ALUMINIUM CLUTCH ASSEMBLY

Page No. :105-106

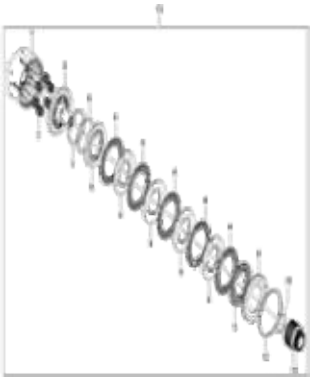

PLATE-24.B CLUTCH & COVER ASSEMBLY (FOR ALUMINIUM CLUTCH)

Page No. :107-108

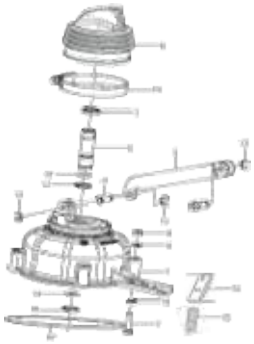

PLATE-1
ENGINE

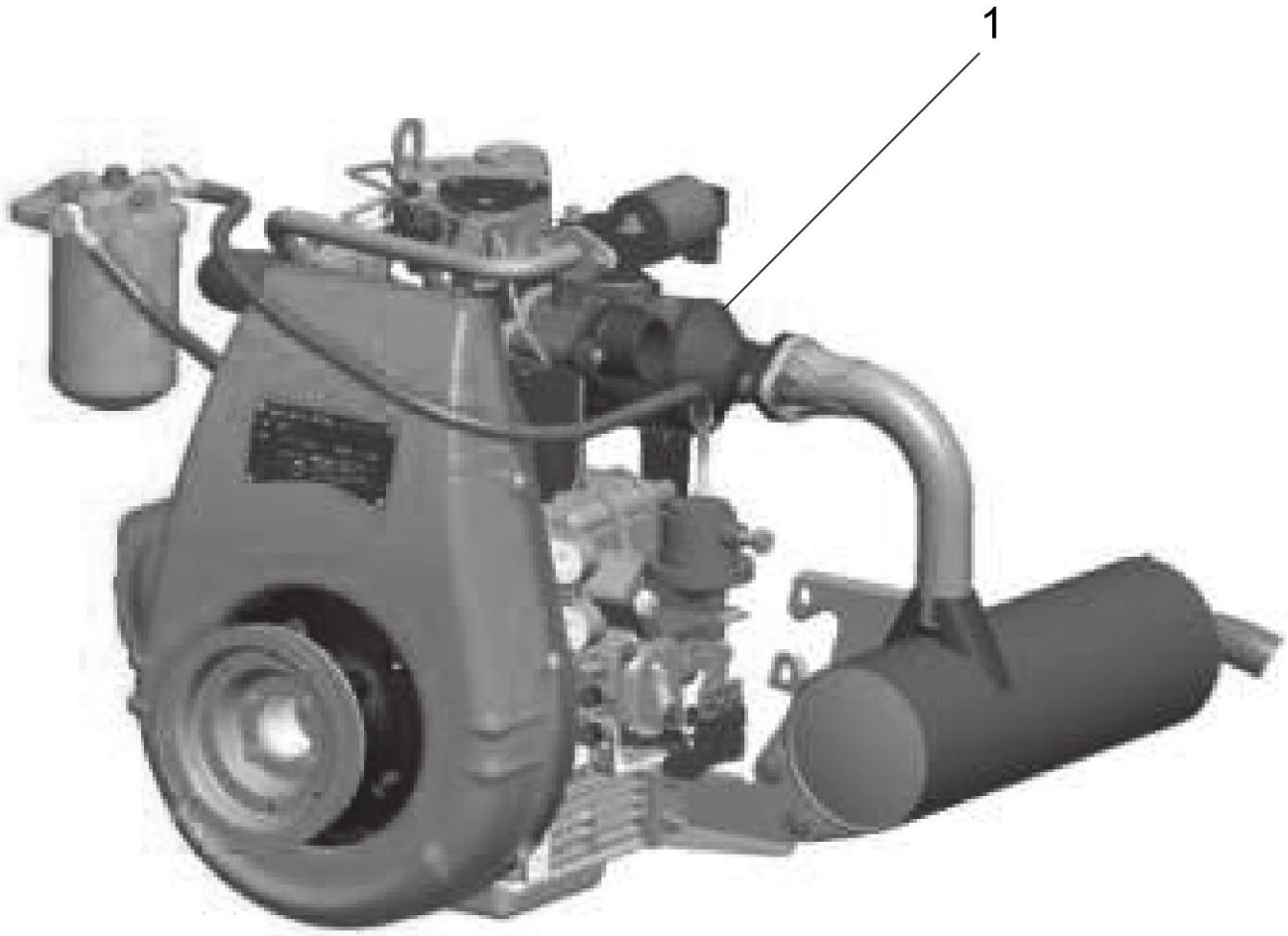

PLATE-1
ENGINE

Fig. No.	Part No.	Description	Qty	Remarks
1	B079045	ENGINE GL435 BSIV DSL AUTO+	1	PASSANGER

PLATE-2

CRANKCASE ASSEMBLY

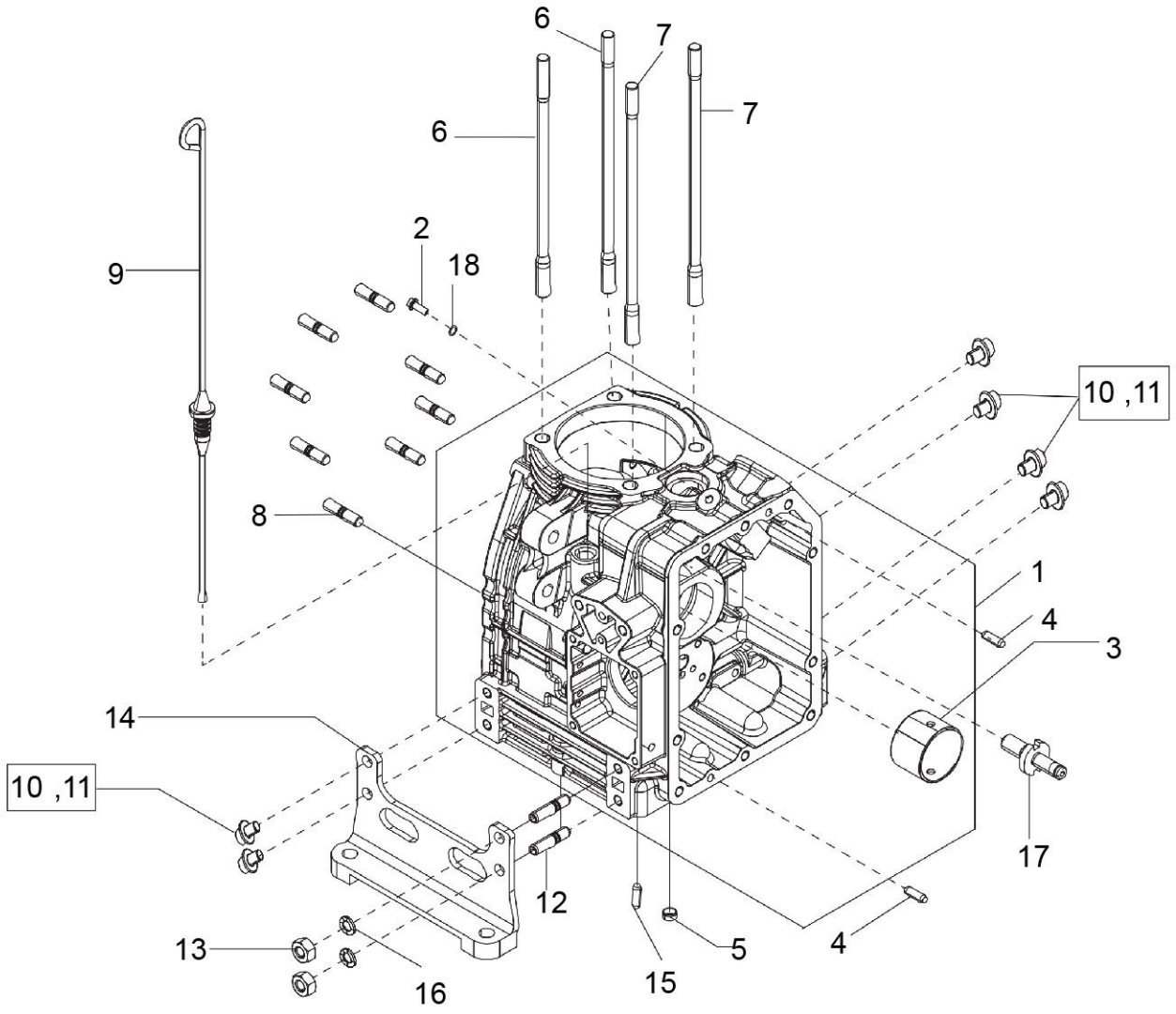

PLATE-2

CRANKCASE ASSEMBLY

Fig. No.	Part No.	Description	Qty	Remarks
1	E10A010006	CRANK CASE ASSLY WITH BUSH (WITH AVM PAD)	1	WITH AVM PAD
2	ED43340	GUIDING BOLT	1	
3	E40002263	BUSH CRANKCASE STD	1	
4	E276846055	DOWEL -PIN	2	
5	E500197087	SLEEVE - OIL PAN IN CRANK CASE	2	
6	E43500539	STUD CYLINDER HEAD	2	
7	E43500540	STUD CYLINDER HEAD ROCKER SHAFT	2	
8	E271678054	STUD FWE SIDE	7	
9	E10G090002	DIPSTICK	1	
10	E50002805	COLLER BOLT M8 X 1.25 X 22	6	
11	E50002805	COLLER BOLT M8 X 1.25 X 22	2	FOR FRONT MTG APPLN
12	E50000506	STUD M8X1.25X34	2	FOR REAR MTG APPLN
13	E45324016	NUT	2	FOR REAR MTG APPLN
14	E400106100	ENGINE FEET.	2	FOR FRONT MTG APPLN
15	E500843036	DOWEL PIN	1	
16	E1756507	SPRING WASHER M8	2	
17	ED30956	PIN LH THREAD	1	
18	ED40642	WASHER (BSII) (N.I.)	1	

PLATE-3

CYLINDER AND PISTON

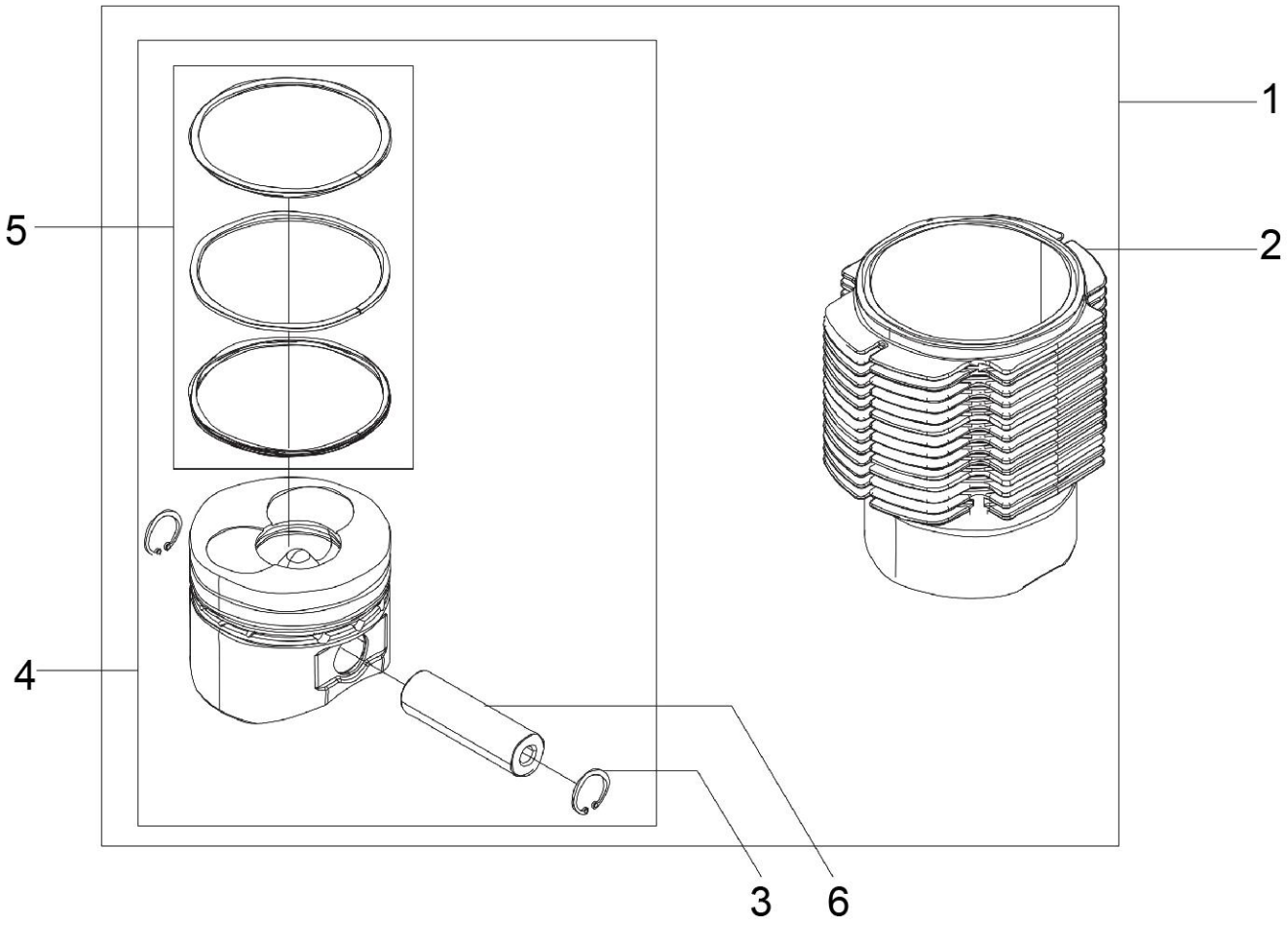

PLATE-3

CYLINDER AND PISTON

Fig. No.	Part No.	Description	Qty	Remarks
1	E10A050007	CYLINDER & PISTON ASSY. KIT	1	
2	E10M030002	CYLINDER GRADE A	1	
3	E3124017	CIRCLIP 500 SR	2	
4	E10A050001	PISTON ASSY. GRADE A SUITABLE FOR DIA20 PIN	1	
5	E43511440	PISTON RING SET (STD)	1	
6	E5408480091	GUDGEON PIN	1	

PLATE-4

CRANKSHAFT SUPPORT

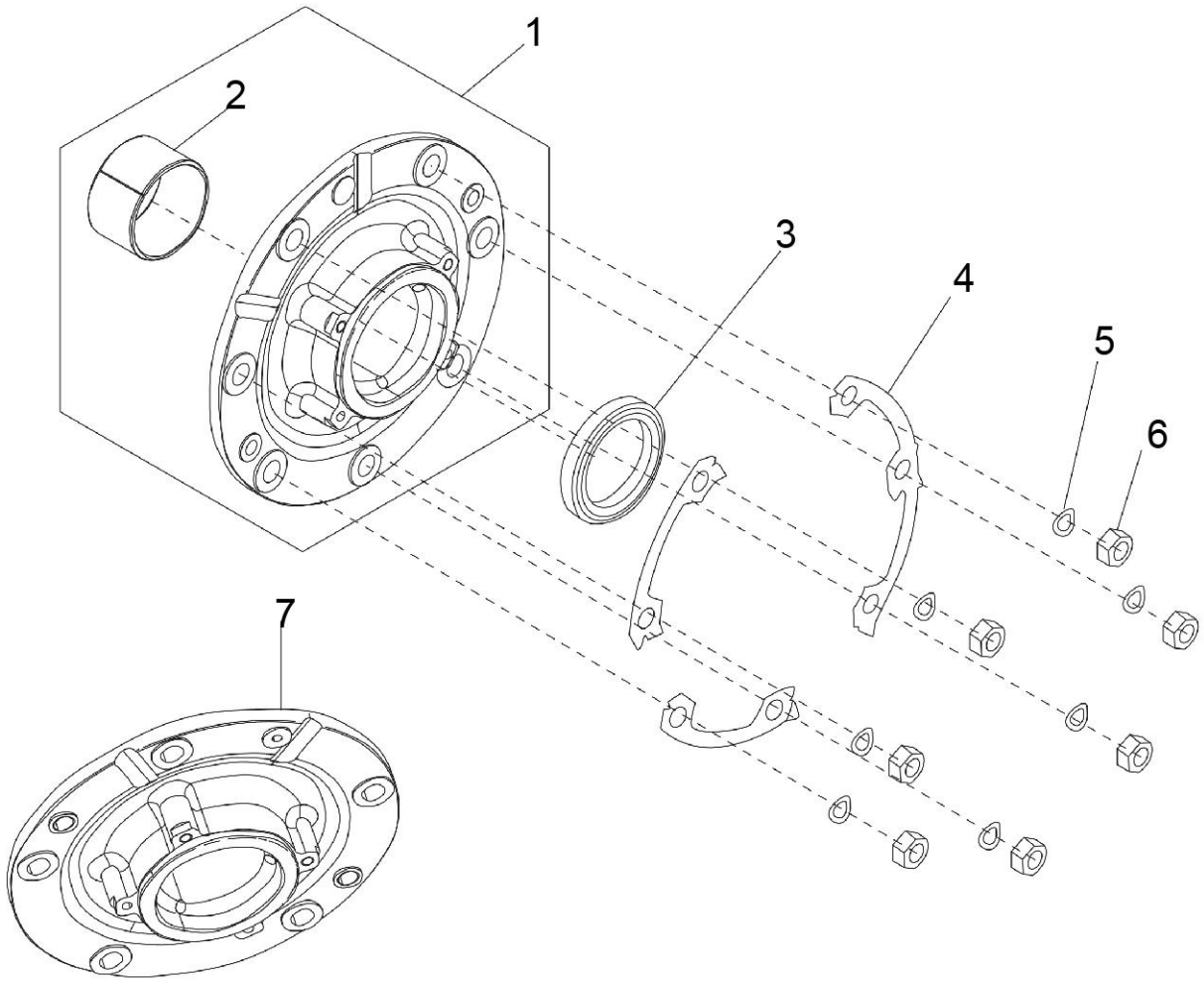

PLATE-4

CRANKSHAFT SUPPORT

Fig. No.	Part No.	Description	Qty	Remarks
1	E10A110007	CRANKSHAFT SUPPORT ASSY.	1	
2	E53002206	BUSH,FWE STD.	1	
3	ED42548	OILSEAL 520/530/GL400	1	
4	E10G110020	SAFETY RETAINER	4	
5	E250755507	SPRING WASHER FOR M8	7	
6	E9324018	NUT M8 X 1.25 X 6.5	7	
7	940048	LIQUID SEALANT	1	

PLATE-5

PTO COVER

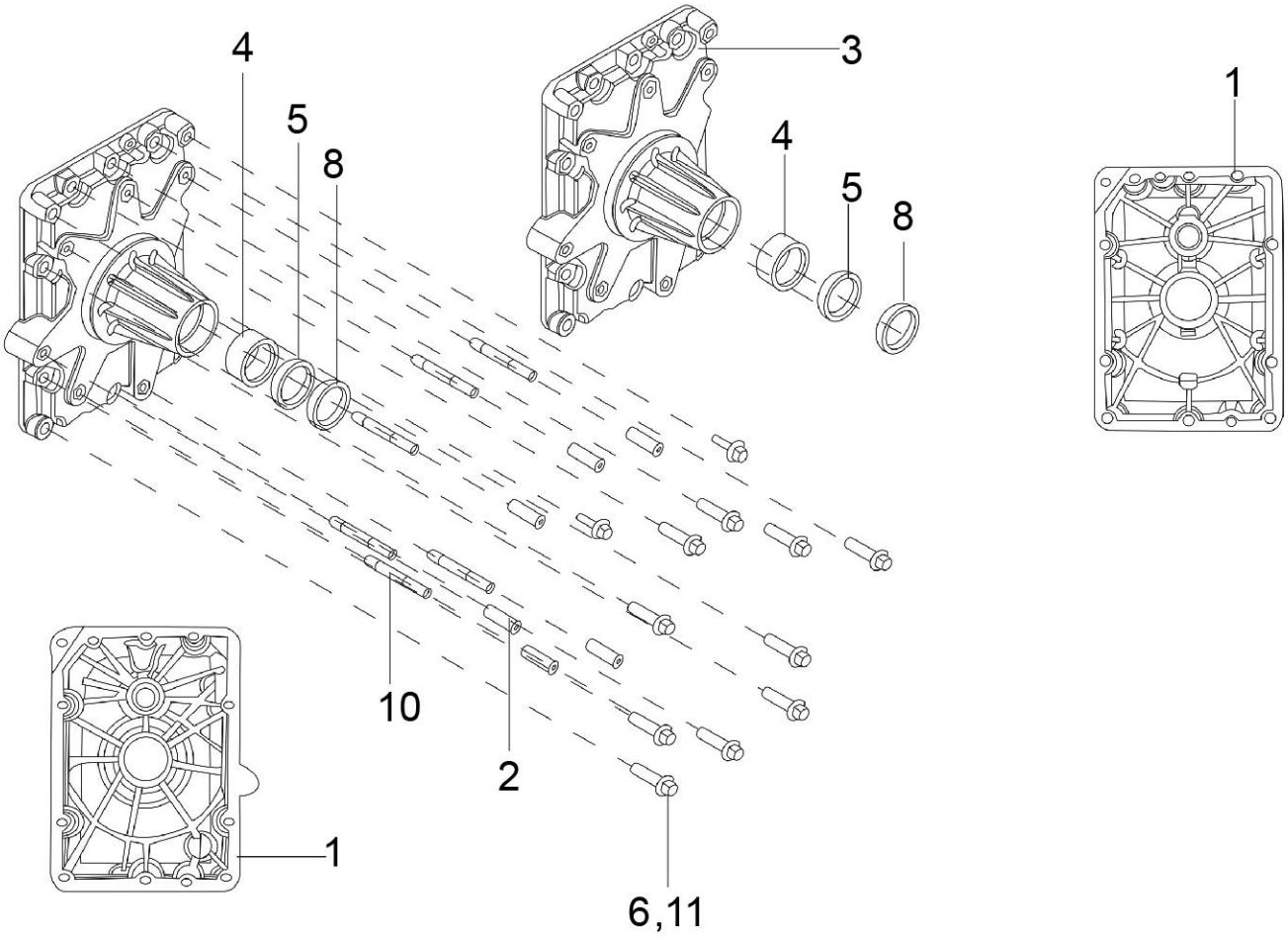

PLATE-5

PTO COVER

Fig. No.	Part No.	Description	Qty	Remarks
1	940048	LIQUID SEALANT	1	
2	E50005578	PLUG FOR STUD M8	6	
3	E43521745	COVER PTO (SIX STUD)	1	REAR MTG APPLN
4	E90303028	BEARING NEEDLE	1	
5	E9121356	OIL SEAL	1	
6	E07502804	COLLER BOLT M8 X 1.25 X 30	8	FRONT MTG APPLN
7	E422973030	CAP SCREW FOR M8X1.25 FOR FUEL PUMP (BSII)	2	FRONT MTG APPLN
8	E50006328	OIL SEAL	1	
9	E50000506	STUD M8X1.25X34	6	FRONT MTG APPLN
10	E43500578	STUD-M8	6	
11	E07502804	COLLER BOLT M8 X 1.25 X 30	2	REAR MTG APPLN

PLATE-6

CYLINDER HEAD & DECOMPRESSION LEVER

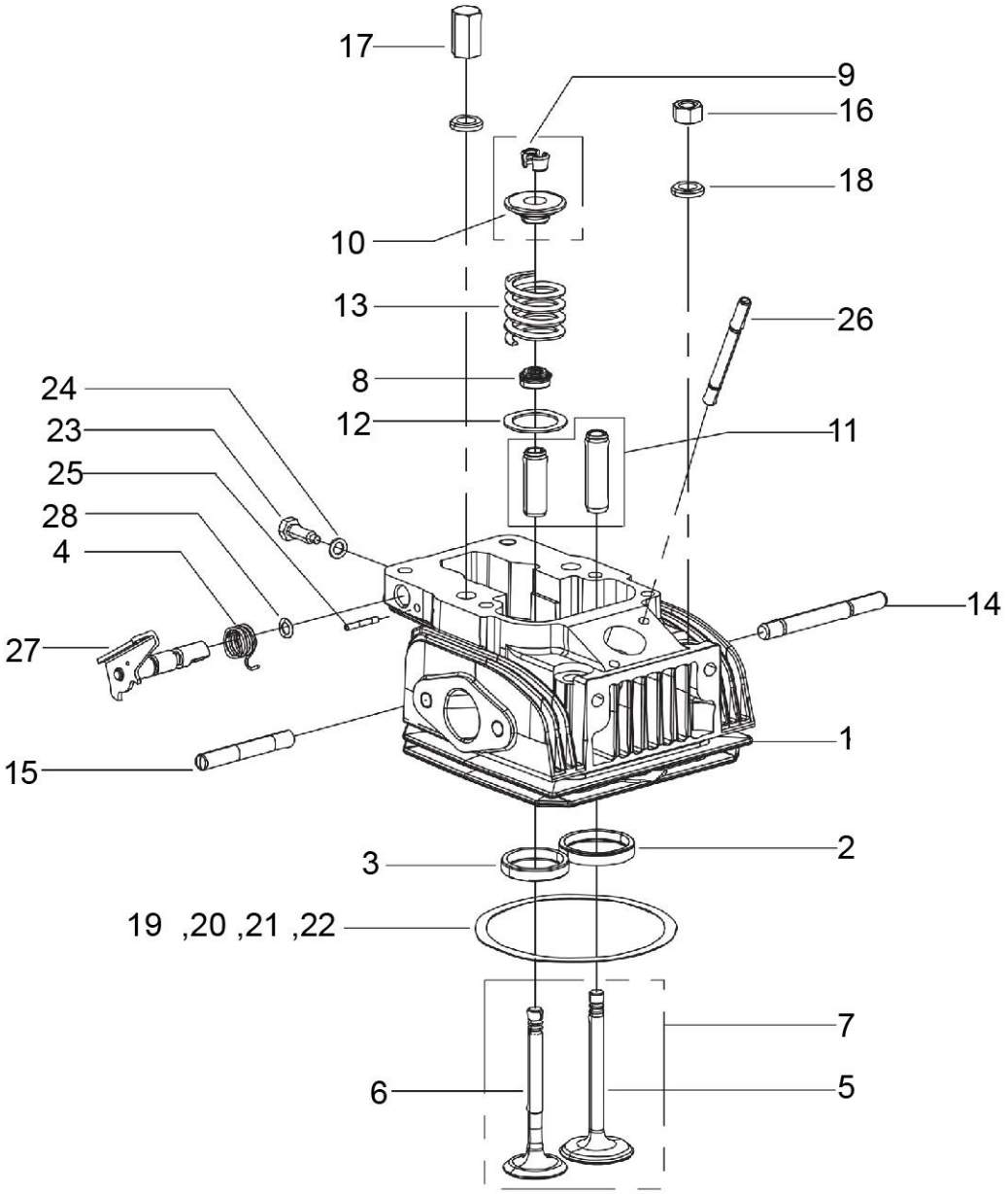

PLATE-6

CYLINDER HEAD & DECOMPRESSION LEVER

Fig. No.	Part No.	Description	Qty	Remarks
1	E10A020002	CYLINDER HEAD ASSEMBLY WITH VALVES	1	
2	E43518358	VALVE SEAT INLET (SEMI FINISH)	1	
3	E5508000118	VALVE SEAT EXHAUST	1	
4	E5005680046	RETURN SPRING	1	
5	E43518363	INLET VALVE	1	
6	ED33454	EXHAUST VALVE	1	
7	E43522238	SET OF VALVE CONSISTING OF SR. NO. 12 & 13	1	
8	E50006342	VALVE STEM SEAL	2	
9	E870022109	VALVE COLLETS (MULTY GROOVE)	4	
10	E500640030	SPRING RETAINER TOP	2	
11	E18A060006	VALVE GUIDE SET	1	
12	E5003430070	DISC	2	
13	E500575545	VALVE SPRING	2	
14	E03B020001	STUD M10X1.5-INTAKE SIDE	2	
15	E10B120002	STUD-M10X1.5 EXHAUST	2	
16	E93240076	NUT	2	
17	ED40165	DOME NUT	2	
18	E97626065	PLAIN WASHER	4	
19	E40016143	JOINT CYLINDER HEAD 0.5 MM	1	
20	E43536107	JOINT CYL. HEAD (0.2 MM THK.)	1	
21	E43536108	JOINT CYL. HEAD (0.3 MM THK.)	1	
22	E43536109	JOINT CYL. HEAD (0.4 MM THK.)	1	
23	E505193049	BOLT	1	
24	E260467001	JOINT	1	
25	E50000901	SPRING DOWEL	1	
26	E10B120001	INJECTOR STUD	1	
27	ED40580	DECOMPRESSION SHAFT ASSY.	1	
28	E268120034	O RING	1	

PLATE-7

OIL FILTER & PRESSURE RELIFE VALVE

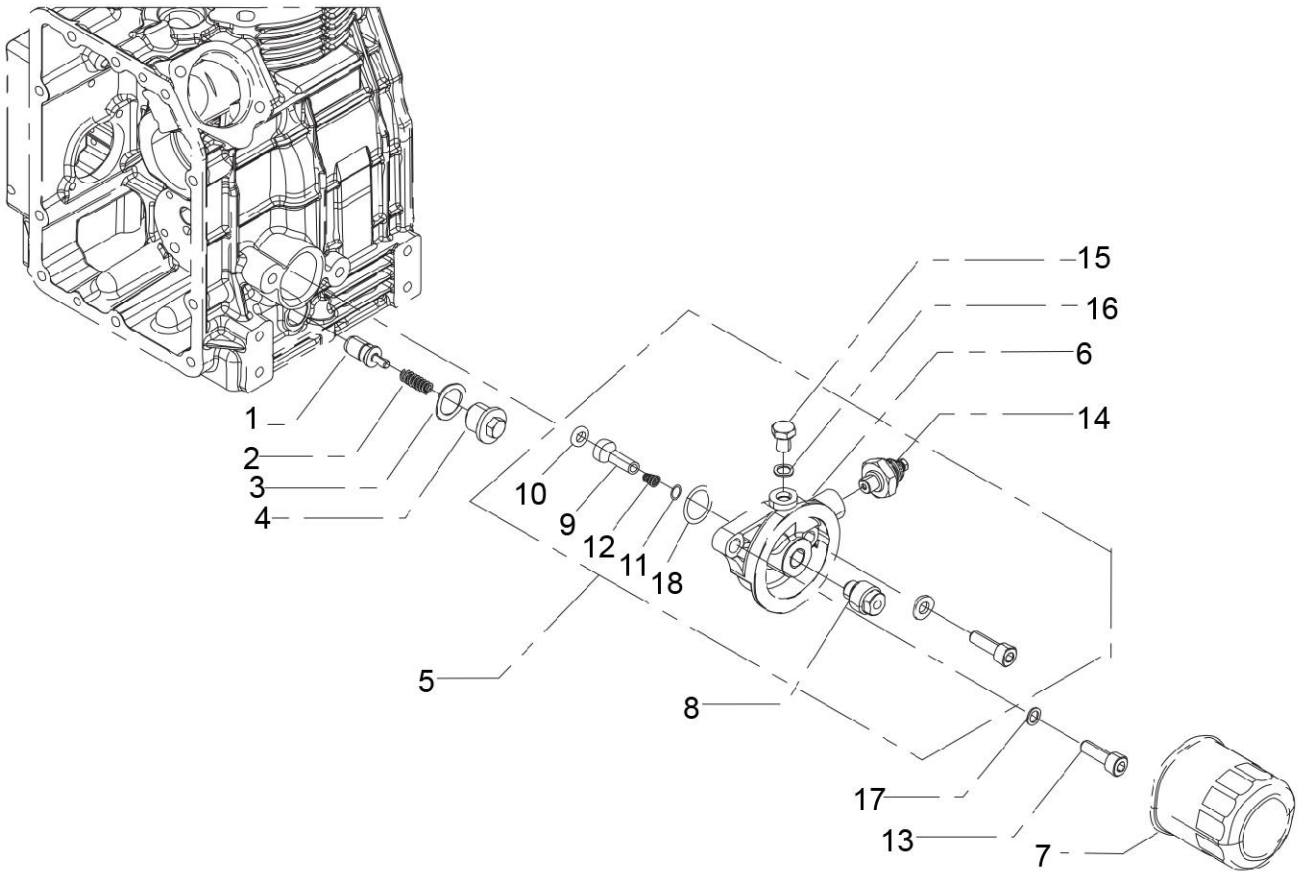

PLATE-7

OIL FILTER & PRESSURE RELIFE VALVE

Fig. No.	Part No.	Description	Qty	Remarks
1	E5609680013	RELIEF VALVE BODY	1	
2	E500575549	SPRING	1	
3	E200467021	JOINT	1	
4	E50000475	PLUG RELIEF VALVE	1	
5	E40001816	FLANGE ASSY. L O FILTER	1	
6	ED21235	FLANGE	1	
7	ED42244	SPIN ON LUB OIL FILTER	1	
8	ED41208	STUD	1	
9	E50006495029	PISTON	1	
10	E50001213143	O RING LUB OIL FILTER	1	
11	E50005625006	SPRING	1	
12	E904120213	O RING	1	
13	E260973027	CAP SCREW M8X 1.25	2	
14	ED41447	OIL PRESSURE SWITCH - PARALLEL THREAD	1	
15	E1177001	BOLT	1	
16	E200467003	JOINT	2	
17	E50000613	MACHINED WASHER 16X8.1X2	2	
18	E260120016	O RING	1	

PLATE-8
OIL PAN

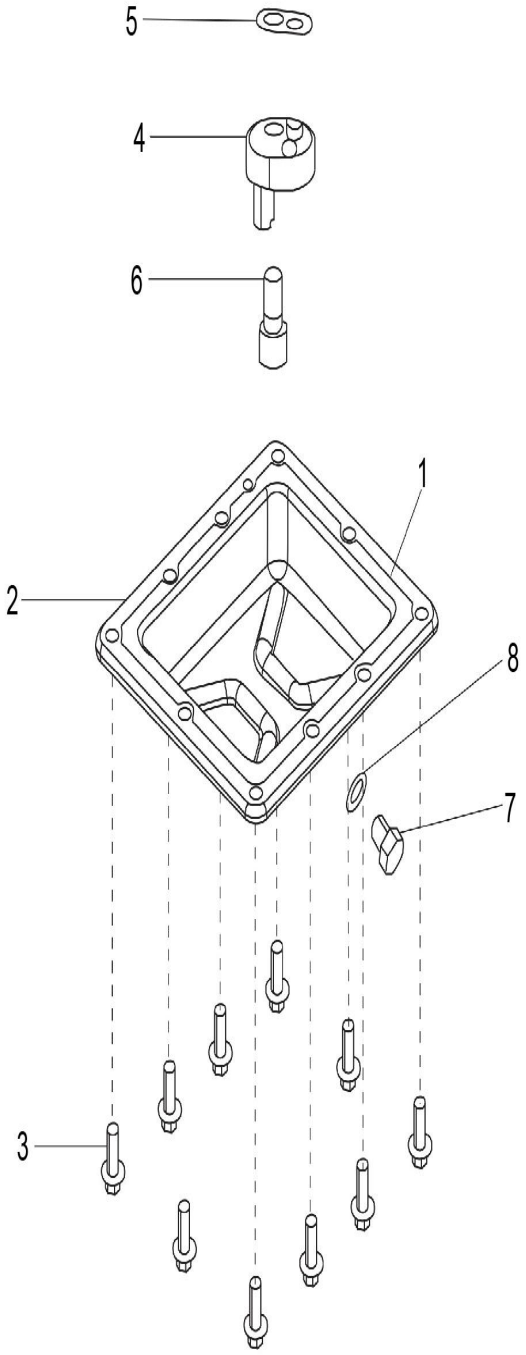

PLATE-8

OIL PAN

Fig. No.	Part No.	Description	Qty	Remarks
1	940048	LIQUID SEALANT	1	
2	E50008099	OIL PAN	1	
3	E50002805	COLLER BOLT M8 X 1.25 X 22	10	
4	E50008883	SUCTION BULB ASSY.	1	
5	E40016141	JOINT SUCTION BULB	1	
6	E99732047	SCREW FOR BULB	1	
7	E50000421	MAGNETIC DRAIN PLUG M12X1.5	1	
8	E250467014	JOINT 12X19X1(JOINT DRAIN PLUG)	1	

PLATE-9

ROCKER ARM COVER

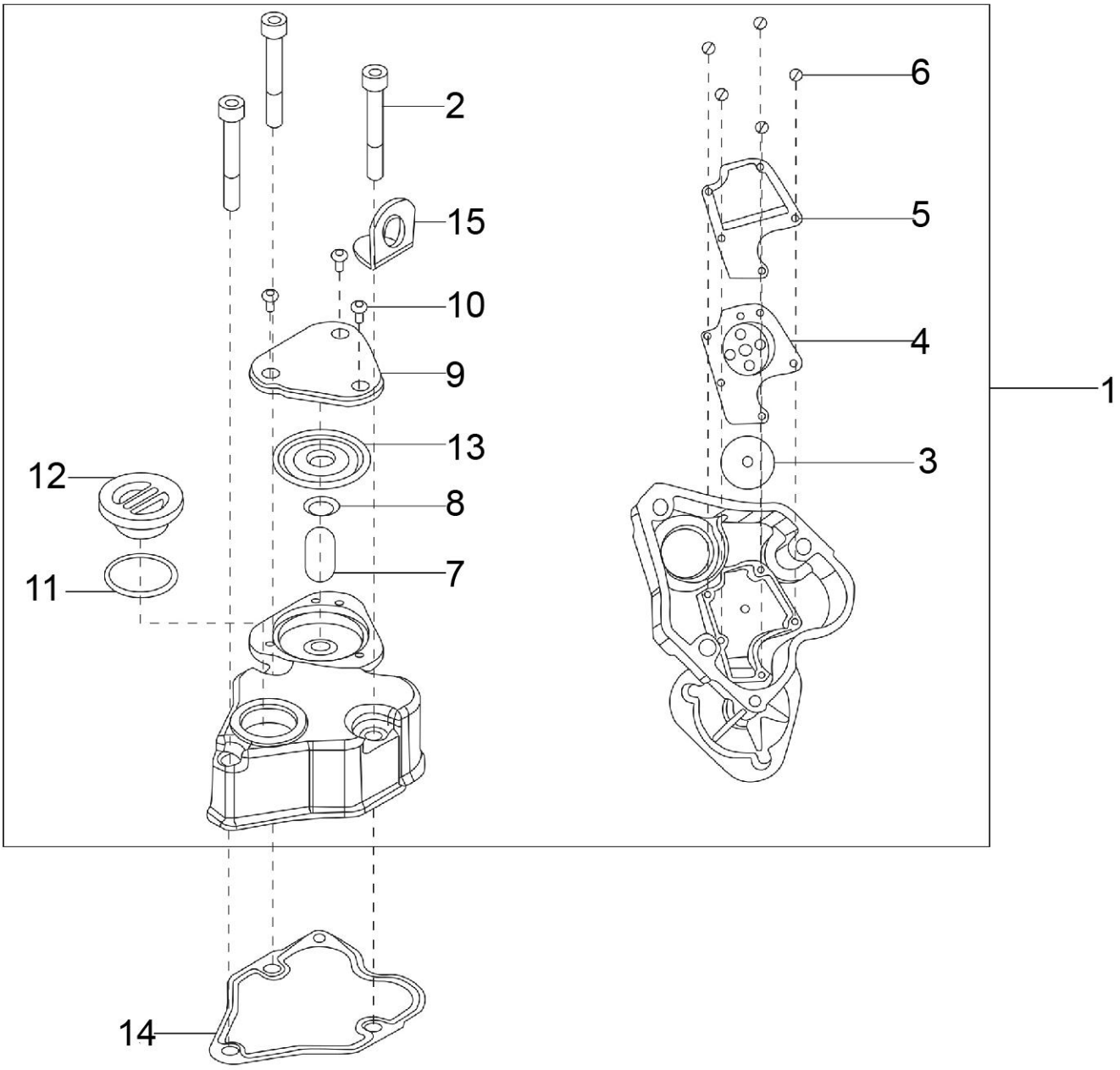

PLATE-9

ROCKER ARM COVER

Fig. No.	Part No.	Description	Qty	Remarks
1	E10A110001	ROCKER BOX COVER ASSY. WITH OIL FILLING PLUG	1	
2	E50000114	BOLT (ALLEN)	2	
3	E1969695019	DIAPPHRAM	1	
4	E1967980064	CUP FOR FILTER	1	
5	E1965140021	SHEET STEEL	1	
6	E51981002	SCREW	5	QTY 2 FOR GOV LEVER
7	E1965755128	SPRING LM TYPE	1	
8	E1967625270	WASHER FOR SAFETY VALVE	1	
9	E10M110002	BREATHER COVER -	1	
10	ESK8694	PHILLIPS HEAD SCREW	3	
11	E91200082	O RING	1	
12	E10M110005	OIL FILLING PLUG	1	
13	ED43751	SAFETY VALVE	1	
14	E10S110001	JOINT FOR ROCKER COVER	1	
15	E904850603	LIFTING HOOK	1	

PLATE-10

LUB OIL PUMP & SPEED GOVERNOR

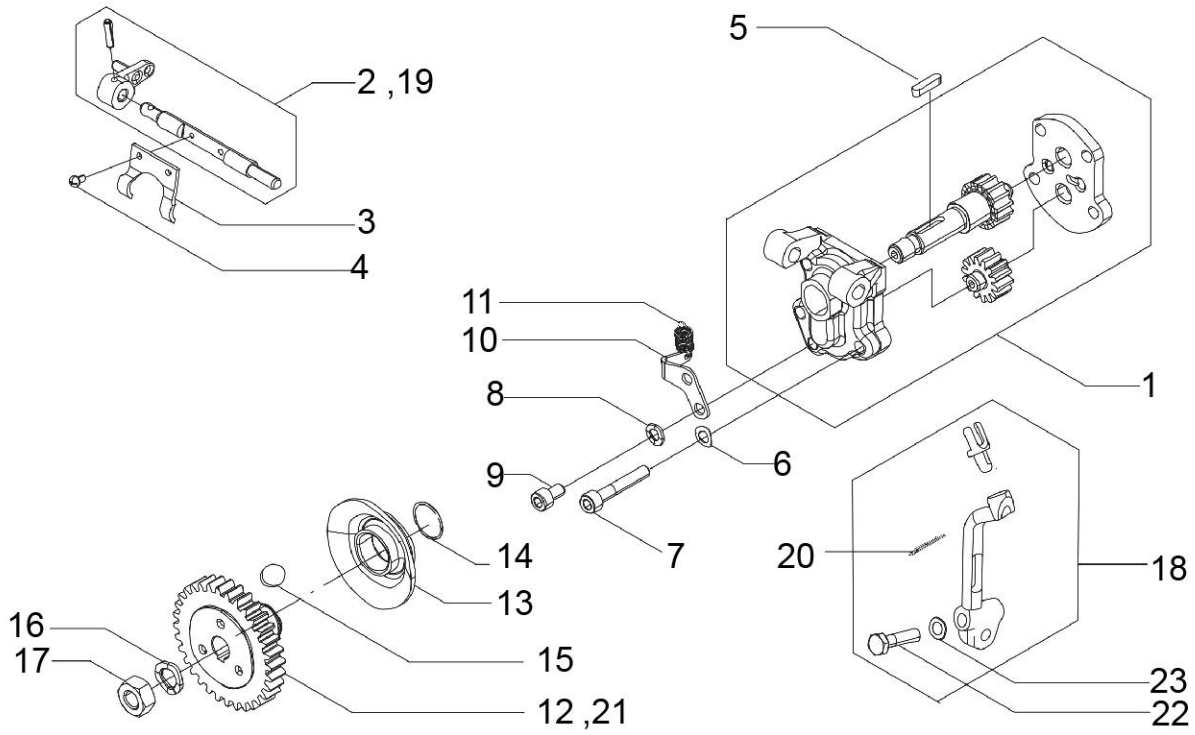

PLATE-10

LUB OIL PUMP & SPEED GOVERNOR

Fig. No.	Part No.	Description	Qty	Remarks
1	E52006709	LUB OIL PUMP ASSY.	1	
2	E50010103	GOVERNOR LEVER ASSY.	1	
3	E500520134	GOVERNOR LEVER (INLET)	1	
4	E51981002	SCREW	2	
5	E500220013	KEY	1	
6	E250755504	SPRING WASHER FOR M6	3	
7	E50000437	HEX SOCKET HEAD SCREW	4	
8	E1756504	SPRING WASHER M6- OIL SEPARATOR 2	2	
9	E264973008	CAP SCREW	1	
10	E5006371045	ANCHOR PLATE	1	
11	E5205801462	SPRING EXCESS FUEL	1	
12	E500493620	GOVERNOR GEAR	1	
13	E500208572	GOVERNOR BELL (STEEL)	1	
14	E500116011	CIRCLIP	1	
15	E3824509	BALL	6	
16	E202756511	SPRING WASHER FOR M10	1	
17	E500324066	NUT	1	
18	E400051135	FUEL PUMP R C LEVER ASSY (BSII)	1	
19	ED43350	GOVERNOR LEVER ASSY.(ALTERNATIVE)	1	ALTERNATIVE TO SR.N0.2
20	E7102800049	SPLIT PIN	1	
21	E50010157	GOVERNOR GEAR	1	ALTERNATIVE TO SR. N0.12
22	E9176007	SCREW	1	
23	E250755504	SPRING WASHER FOR M6	1	

PLATE-11

REMOTE THROTILE & STOP CONTROL

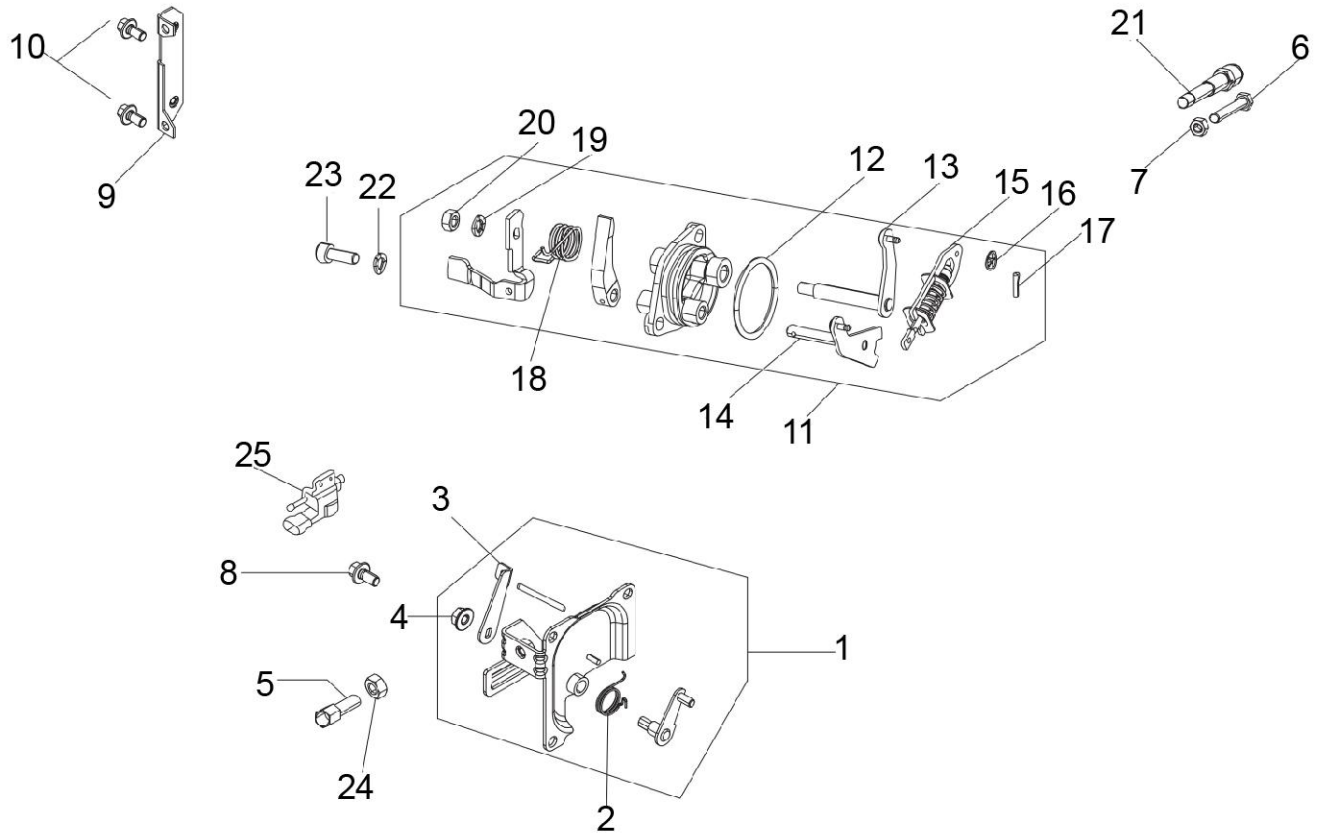

PLATE-11

REMOTE THROTILE & STOP CONTROL

Fig. No.	Part No.	Description	Qty	Remarks
1	E10A110006	REMOTE THROTTLE AND STOP CONTROL FOR REAR MTG ENGINE (2 TO 6)	1	
2	E500568044	SPRING STOP LEVER RETURN	1	
3	E500520214	EXTERNAL STOP LEVER	1	
4	E07502811	COLLAR NUT M6 X 1	1	
5	E50000452	TERMINAL	2	
6	E07500428	MAX SPEED SETTING SCREW	2	
7	E105324008	NUT HEX -OIL SEPARATOR MOUNTING	2	
8	E07502813	COLLOR BOLT M6 X 12	2	
9	ED41174	BRACKET REMOTE STOP	1	
10	E07502813	COLLOR BOLT M6 X 12	2	
11	E10A120005	ASSY-GOVERNOR SUPPORT (20 TO 32) WITH CIRCLIP	1	
12	E52006205	O RING	1	
13	E5205200777	UPPER LEVER WITH PIN	1	
14	E5205200778	LOWER LEVER WITH PIN	1	
15	E40009645	GOVERNOR SPRING ASSEMBLY	1	
16	E27762505	MACHINED WASHER	2	
17	E9280003	SPLIT PIN	2	
18	E500568043	SPRING	1	
19	E1756504	SPRING WASHER M6- OIL SEPARATOR 2	1	
20	E105324008	NUT HEX -OIL SEPARATOR MOUNTING	1	
21	E50020140	BOLT ASSLY (PUMPSET) (EXCESS FUEL)	1	
22	E1756504	SPRING WASHER M6- OIL SEPARATOR 2	2	
23	E270973010	CAP SCREW (TUBE OIL ADAPTER)	2	
24	E105324008	NUT HEX -OIL SEPARATOR MOUNTING	2	
25	E10G130001	THROTTLE POSITION SENSOR (CW-TYPE)	1	

PLATE-12

AIR SHROUD/ FLYWHEEL / PULLEY/ ELECTRIC START SYSTEM COMPONENTS

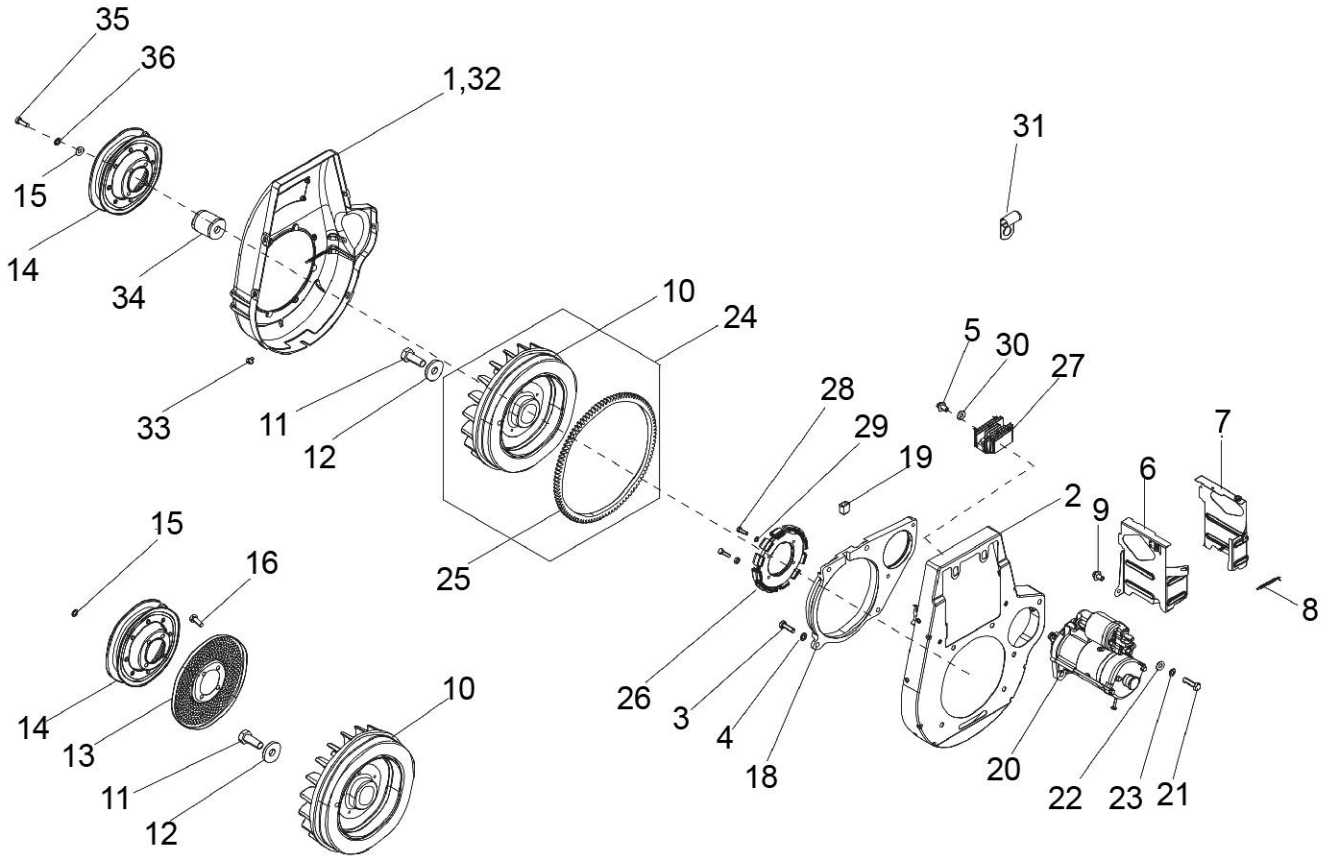

PLATE-12

AIR SHROUD / FLYWHEEL / PULLEY / ELECTRIC START SYSTEM COMPONENTS

Fig. No.	Part No.	Description	Qty	Remarks
1	E43531743	AIR SHROUD (BLUE)	1	
2	E43531725	BACK PLATE	1	
2	E10G110026	BACK PLATE (PCA ENGINE)	1	PCA Engine
3	E9177006	BOLT M8X1.25X25	4	
4	E1756507	SPRING WASHER M8	4	
5	ESK4584	BOLT M8X1.25X40	2	
6	E03G100003	BAFFLE PLATE INTAKE	1	
7	E03G100001	BAFFLE PLATE EXHAUST	1	
8	E5405725043	SPRING AIR BAFFLE	1	
9	E90979037	PHILIPS SCREW	3	
10	E10M030001	FLYWHEEL INTEGRAL	1	
11	E52200434	SCREW HEX. HEAD M14X1.5X35 LH THREAD FLYWHEEL FIXING	1	
12	E97626043	PLAIN WASHER FLYWHEEL	1	
13	ED32131	GUARD PLATE	1	
14	E50007626	STARTING PULLEY (SHEET METAL)	1	
15	E260756505	SPRING WASHER (FOR SHEET METAL PULLEY)	4	
16	E50000164	BOLT	4	
17	E500405518	STARTING ROPE	1	
18	E40001773	PLATE STARTER	1	
19	E40005592	BUSH FOR FMA CABLE	1	
20	E10G140001	STARTER MOTOR CF60	1	
21	E47177007	SCREW M8X1.25X30	2	
22	E1756507	SPRING WASHER M8	2	
23	E45762512	PLAIN WASHER	2	
24	E10A030001	FLYWHEEL ASSLY WITH RING GEAR (11 & 26)	1	
25	E40009648	RING GEAR STARTER 0.7 KW (INEL FMA)	1	
26	E10G030001	STATOR	1	
27	E10G130005	EGR CONTROL UNIT-CARGO	1	
27	E10G130018	EGR CONTROLLER-CARGO/PASS./APE CITY	1	PCA Engine
28	E40020135	BOLTS FOR FMA STARTOR	4	
29	E26756503	SPRING WASHER	4	
30	EL156507	SPRING WASHER	2	
31	E6193361721	CLAMP	2	
32	E43531726	AIR SHROUD (BLACK)	1	
33	E90979039	SCREW	6	

PLATE-12

AIR SHROUD/ FLYWHEEL / PULLEY/ ELECTRIC START SYSTEM COMPONENTS

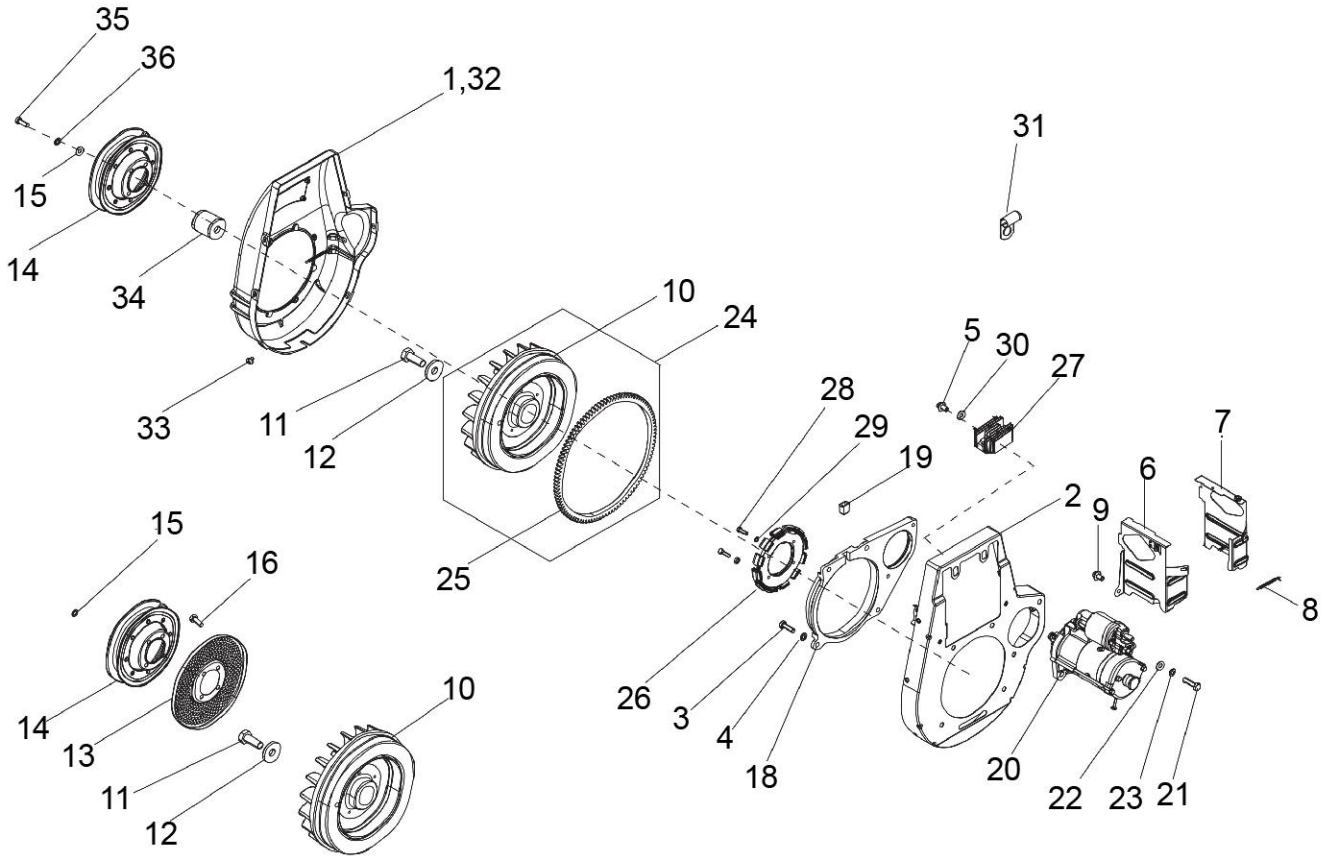

PLATE-12

AIR SHROUD / FLYWHEEL / PULLEY / ELECTRIC START SYSTEM COMPONENTS

Fig. No.	Part No.	Description	Qty	Remarks
34	ED42246	SPACER FR PULLEY	1	
35	E40000565	STUD FOR PULLEY	4	
36	E1324010	NUT	4	

PLATE-13

CONNECTING ROD & CRANKSHAFT

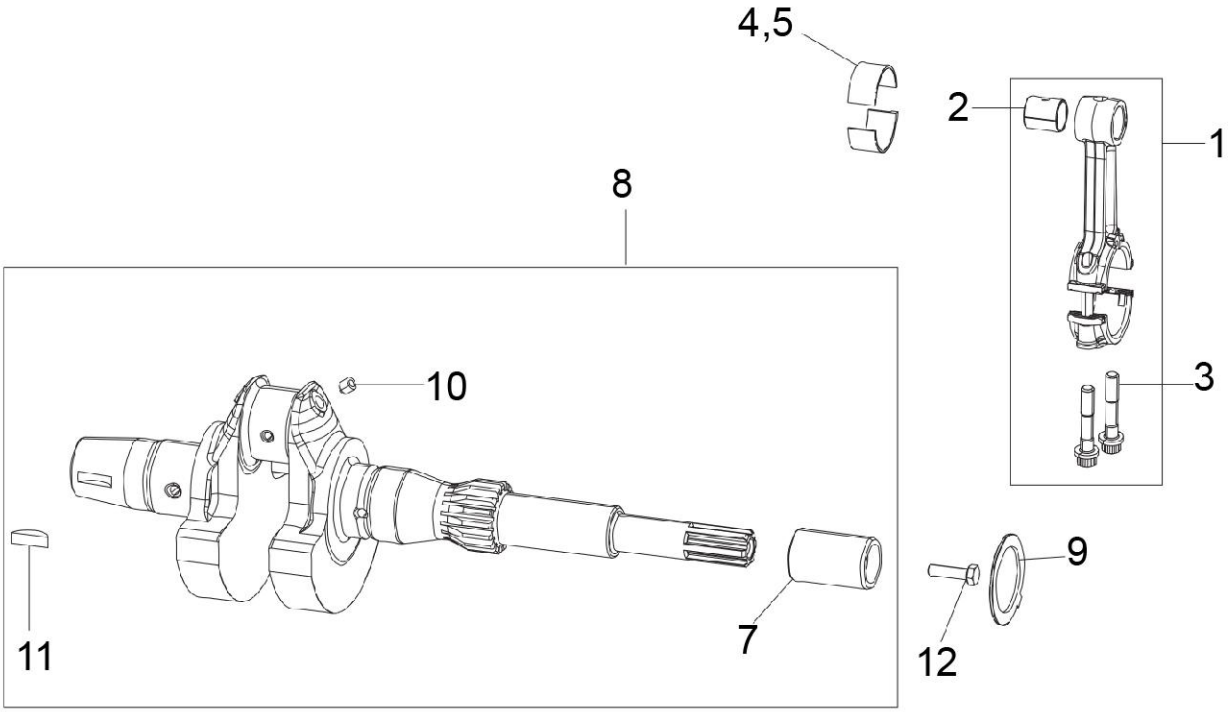

PLATE-13

CONNECTING ROD & CRANKSHAFT

Fig. No.	Part No.	Description	Qty	Remarks
1	E43509046	CONNECTING ROD ASSY - FRACTURED	1	
2	E50009205	BUSH SMALL END CON ROD	1	
3	E43520166	COLLAR BOLT M8X1 (CON ROD)	2	
4	E50002296	LARGE END BEARING WITH COPPER LED PAIR (STD)	1	
5	NS	NOT SERVICEABLE	1	
6	E43510791	FRACTURED CON ROD BOLT KIT	1	NI
7	ED40208	SLEEVE DOUBLE OIL SEAL	1	REAR MTG APPLN
8	E43510715	CRANKSHAFT WITH KEY CONSIST OF 8 & 12.	1	REAR MTG APPLN
9	E500125708	THRUST WASHER	1	
10	E500900038	PLUG OIL HOLE	2	
11	E500228048	KEY - F.W.E.	1	
12	E47177007	SCREW M8X1.25X30	1	REAR MTG APPLN

PLATE-14

AIR CLEANER & EXHAUST MUFFLER

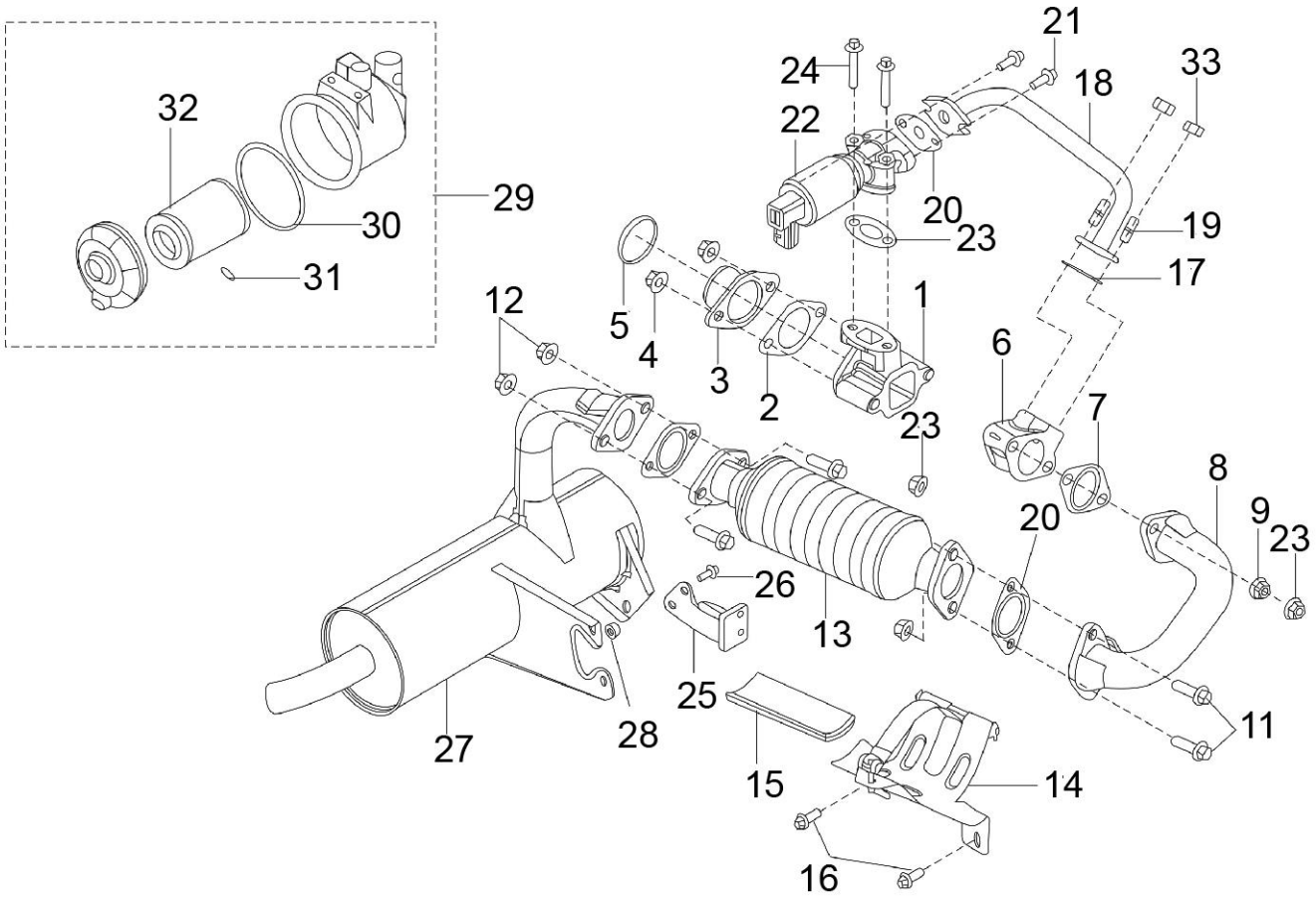

PLATE-14

AIR CLEANER & EXHAUST MUFFLER

Fig. No.	Part No.	Description	Qty	Remarks
1	E10M070001	FLANGE INTAKE MACHINED	1	
2	E10S070002	JOINT-INTAKE FLANGE	2	
3	E10T070001	FLANGE FOR AIR FILTER	1	
4	E07502812	COLLAR NUT M10X1.5	2	
5	E10G110005	PLASTIC CAP FOR AIR FILTER FLANGE	1	
6	E10M070002	FLANGE EXHAUST MACHINED	1	
7	E03S070003	JOINT-EXHAUST FLANGE	2	
8	E10T070002	PIPE-EXHAUST(EXHAUST FLANGE TO OXYCAT)	1	
9	E07502812	COLLAR NUT M10X1.5	2	
10	E87026113	GASKET EXHAUST	2	NI
11	E43502821	HEX HEAD FLANGE BOLT M10X1.5X30	4	
12	E07502812	COLLAR NUT M10X1.5	4	
13	B078205R	OXYCAT	1	
13	E10G070007	OXYCAT- CORNING INDIA(SHARDA MAKE)	1	PCA Engine-Corning India
13	E10G070014	OXYCAT -D+5 (PCA ENGINE)	1	PCA Engine
14	E43527721	OXYCAT BKT & THERMAL INSULATION ASSLY.	1	
14	E43527721	OXYCAT BKT & THERMAL INSULATION ASSLY.	1	For Vicat
14	E10G140041	BRACKET FOR OXICAT-ELLIPTICAL SHAPE COM.	1	PCA Engine-Corning India
14	E10G070016	CATCON BRACKET FOR CORNING	1	PCA Engine-Corning India
15	E43526171	THERMAL INSULATION 120X50X8	1	
16	E50002805	COLLER BOLT M8 X 1.25 X 22	2	
17	E43526150	GASKET(EXHAUST MANIFOLD-EGR PIPE)	1	
18	E10T070007	PIPE-EGR	1	
18	E10T070010	EGR PIPE-FOR ALL BSIV MODEL (PCA ENGINE	1	PCA Engine
19	E40000549	STUD AIR INTAKE	2	
20	E43526149	GASKET INTAKE FLANGE	1	
21	E50002805	COLLER BOLT M8 X 1.25 X 22	2	
22	E10G070001	EGR SOLENOID VALVE (NORMALLY OFF)	1	
23	E10S070003	GASKET(EGR VALVE-EGR PIPE)	1	
24	E07502803	COLLAR BOLT ROCKER COVER M8 LIFTING HOOK SIDE	2	
25	E43520672	BRACKET-MUFFLER (ENGINE SIDE)	1	
26	E50002805	COLLER BOLT M8 X 1.25 X 22	2	
27	E10A070003	ASSEMBLY MUFFLER-APE CITY BSIV	1	REAR MTG APPLN
28	E07502810	COLLAR NUT M8 X 1.25	2	LOOSE PART
29	E43518650	AIR FILTER ASSY. WITHOUT BRACKET	1	REAR MTG APPLN

PLATE-14

AIR CLEANER & EXHAUST MUFFLER

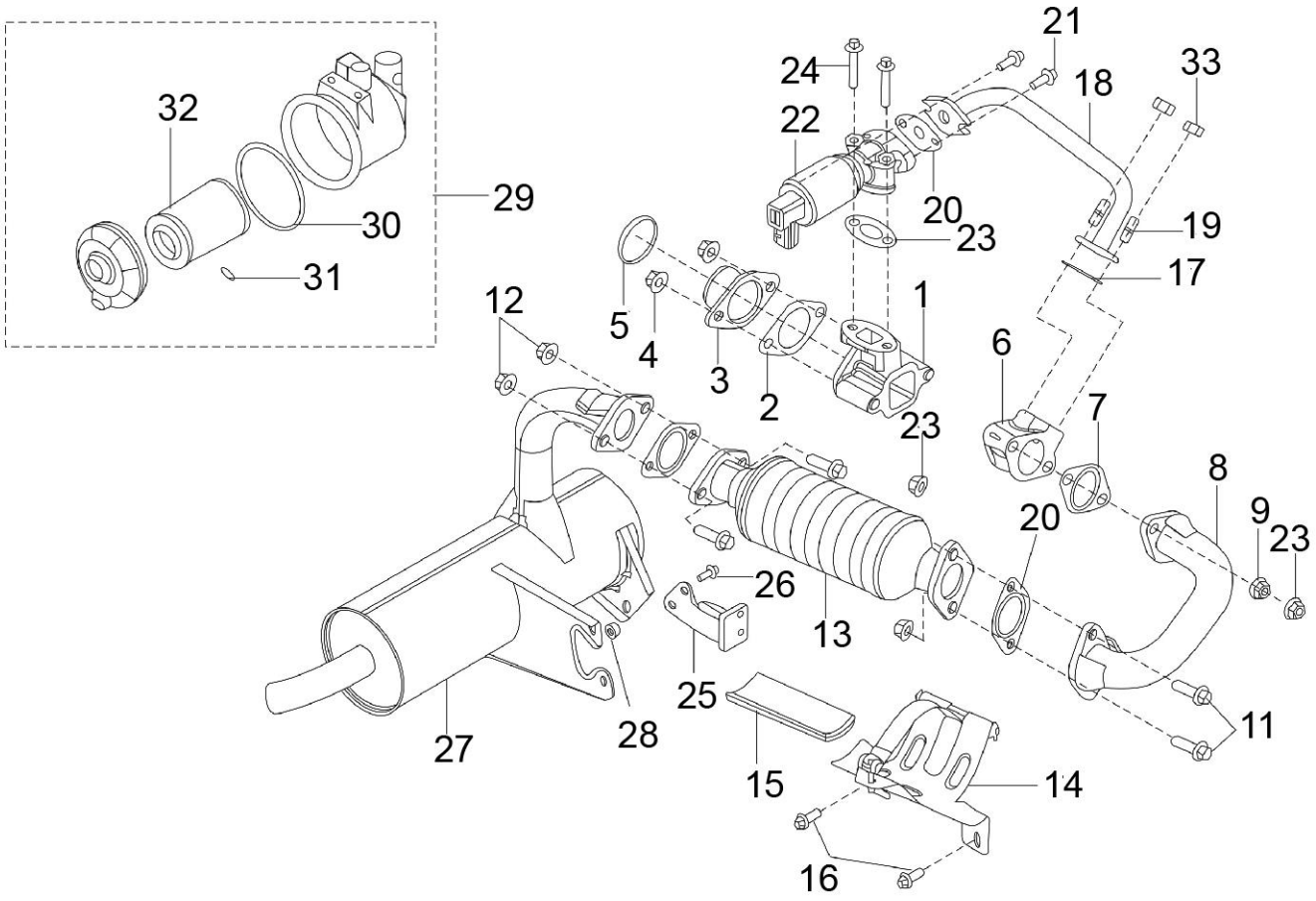

PLATE-14

AIR CLEANER & EXHAUST MUFFLER

Fig. No.	Part No.	Description	Qty	Remarks
29	E43518676	AIR FILTER ASSY. (SOGEFI) (PCA ENGINE)	1	PCA Engine
30	920105	SPONGE GASKET O RING)	1	
31	920087	DUST VALUE	1	
32	940094	ELEMENT FOR AIR FILTER	1	
33	E075028010	NUT	2	

PLATE-15
INJECTOR

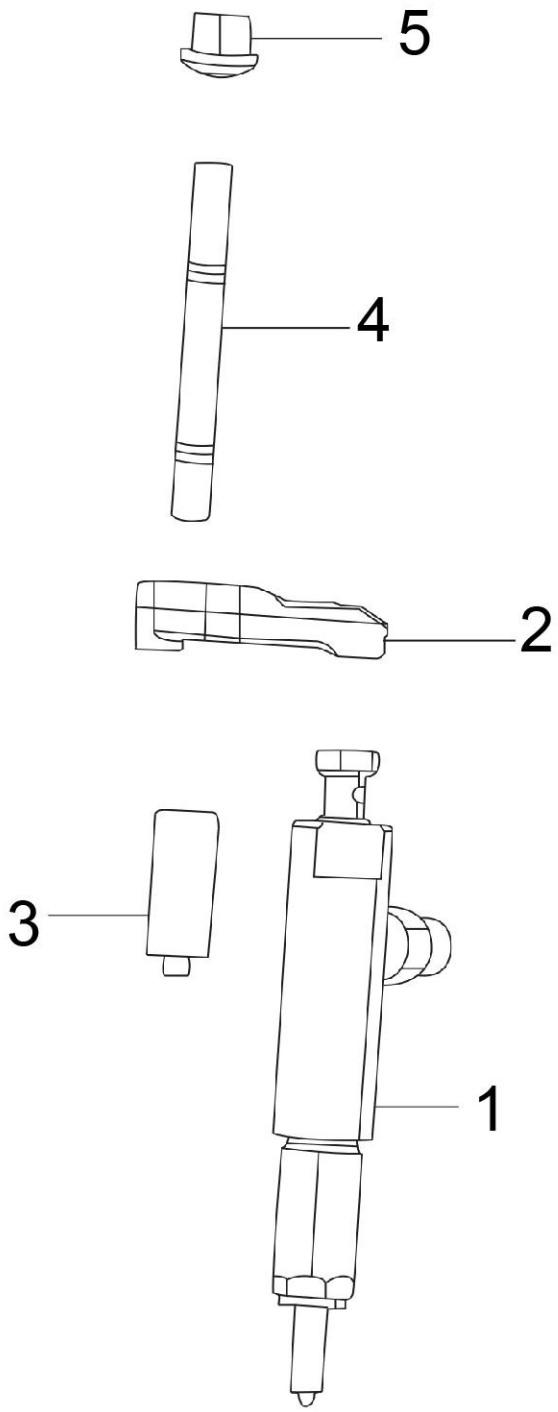

PLATE-15

INJECTOR

Fig. No.	Part No.	Description	Qty	Remarks
1	E10G120004	INJECTOR ASSY WITH JOINT	1	
2	E10M120004	FLANGE INJECTOR	1	
3	E10M120003	DOWEL PIN	1	
4	E10B120001	INJECTOR STUD	1	
5	E60000227	HEX. NUT FOR INJECTOR CLAMP M8X1.25	1	

PLATE-16

FUEL PUMP

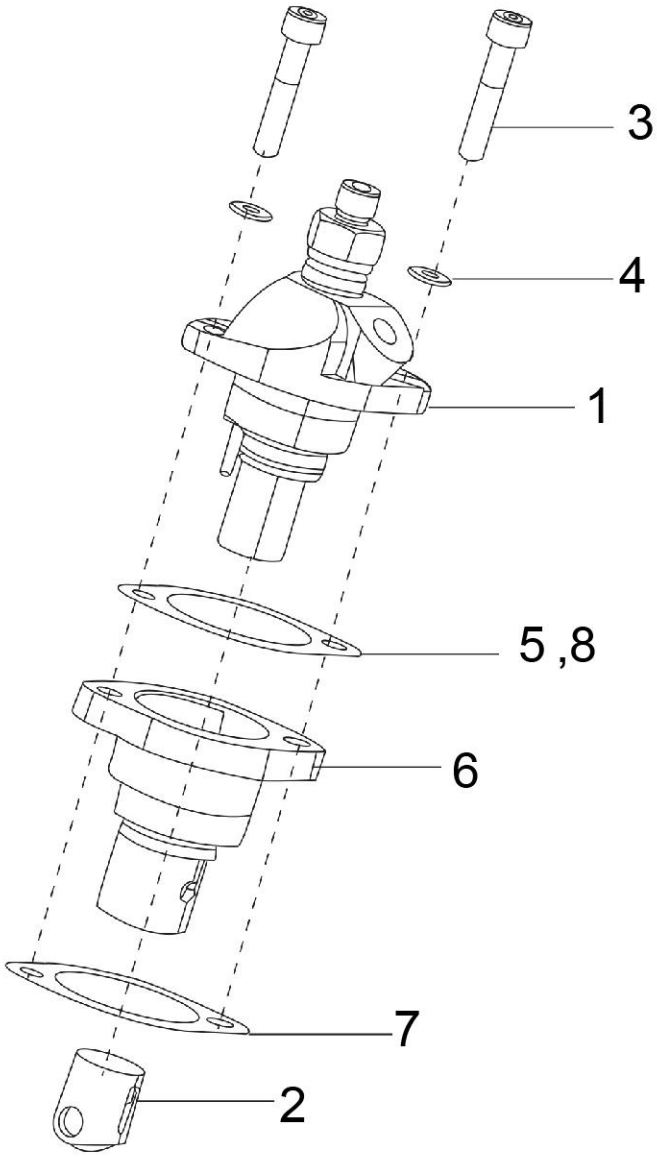

PLATE-16

FUEL PUMP

Fig. No.	Part No.	Description	Qty	Remarks
1	E10G120069	FUEL PUMP ASSEMBLY (GCL) 8.5 ELEMENT	1	
1	E10G120070	FIP (PCA ENGINE)	1	PCA Engine
2	E10G120003	ROLLER TAPPET	1	
3	E10M120019	SCREW	2	
4	E1756507	SPRING WASHER M8	2	
5	E500458029	SHIM 0.1MM	1	AS REQUIRED
6	E10M120001	FIP CASING	1	
7	ED42723	JOINT FOR FIP CASING (0.5MM THICK)	1	
8	E5004580057	SHIM 0.05MM FOR FUEL PUMP	1	AS REQUIRED

PLATE-17

CAM SHAFT, PUSH ROD & ROCKER ARM

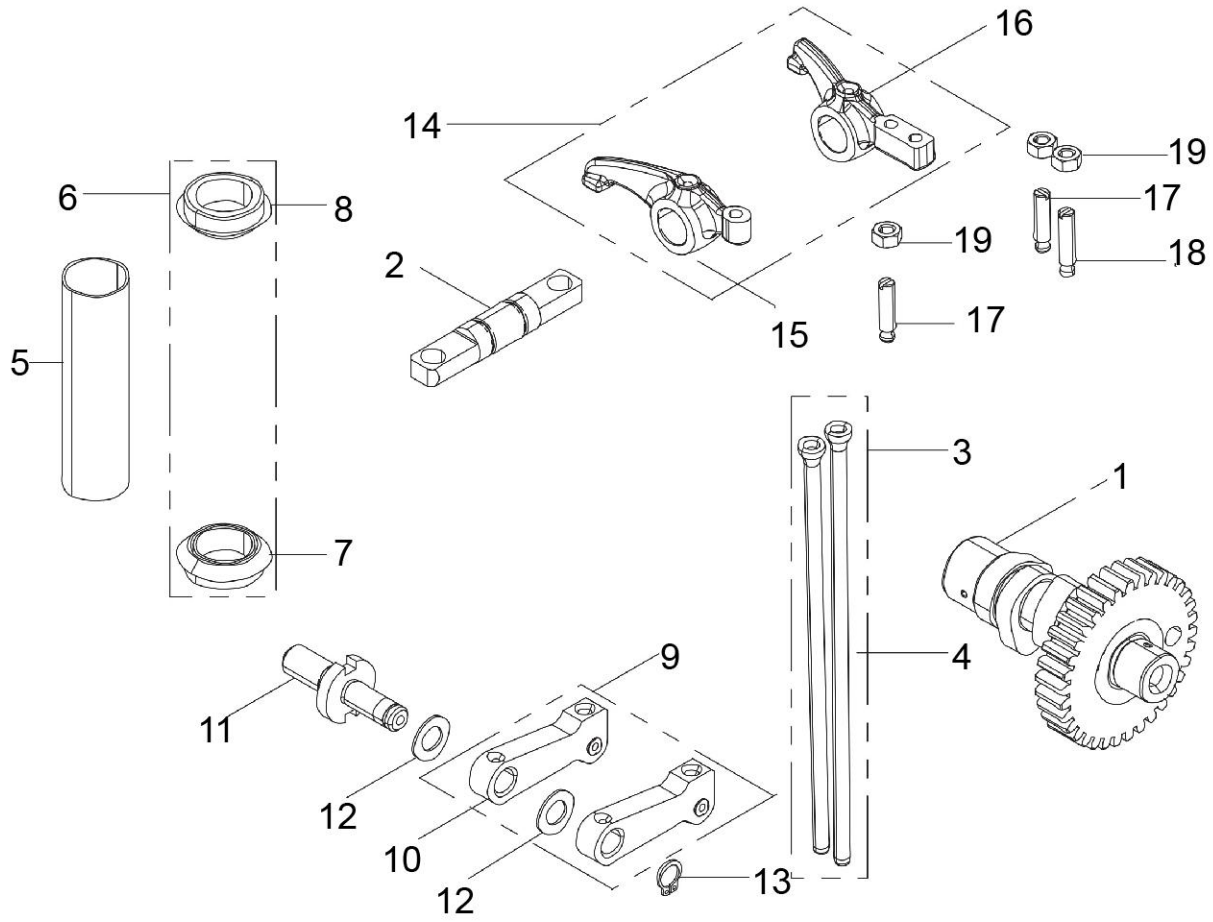

PLATE-17

CAM SHAFT, PUSH ROD & ROCKER ARM

Fig. No.	Part No.	Description	Qty	Remarks
1	E10A060006	SPLIT CAMSHAFT	1	
1	E10A060010	CAMSHAFT (PCA ENGINE)	1	PCA Engine
2	E5406045038	ROCKER FULCRUM	1	
3	E43507359	SET OF PUSHRODS	1	
4	E43507331	PUSH ROD 500 SR.	2	
5	E43507330	PUSH ROD TUBE	1	
6	E43526174	SLEEVE SET CONSISTING OF 4 & 5	1	
7	E40006428	JOINT PUSH ROD SLEEVE (G400AG)	1	
8	E40006428	JOINT PUSH ROD SLEEVE (G400AG)	1	
9	E52005171	SET OF CAM FOLLOWER LEVERS	1	
10	E5005271054	CAM FOLLOWER LEVER	2	
11	ED30956	PIN LH THREAD	1	
12	E500755006	DISTANCE PIECE	2	
13	E47124004	CIRCLIP	1	
14	E10A060009	ROCKER LEVER SET	1	
15	E43502707	ROCKER LEVER - INLET	1	
16	NS	NOT SERVICEABLE	1	
17	E500985048	ADJUSTING SCREW	2	
18	E505985052	DECOMPRESSOR OPERATING SCREW	1	
19	E105324008	NUT HEX -OIL SEPARATOR MOUNTING	3	

PLATE-18

EXTERNAL FUEL FILTER & FUEL PIPES

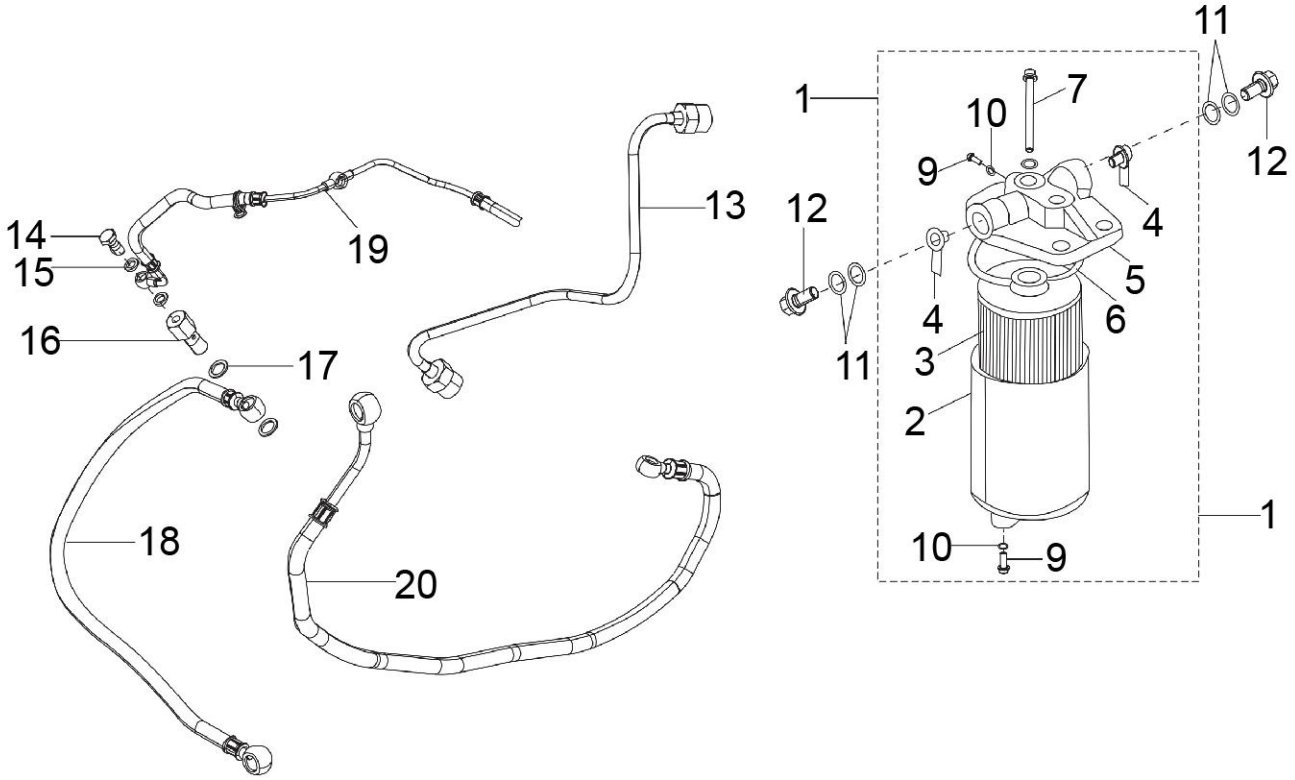

PLATE-18

EXTERNAL FUEL FILTER & FUEL PIPES

Fig. No.	Part No.	Description	Qty	Remarks
1	F002H25009	FUEL FILTER ASSY. (WITH STAR INSERT) (0.5 LIT.) SUPPLIER	1	BOSCH
1	E10G120012	FILTER (WITH STAR INSERT) 0.5 LTR	1	GCL
2	9451035101	FILTER HOUSING	1	
3	9451037405	DIESEL FILTER ELEMENT	1	
4	E2410508007	PROTECTIVE CAP	1	
5	F002H20333	FILTER TOP COVER	1	
6	NS	NOT SERVICEABLE	1	
7	NS	NOT SERVICEABLE	1	
8	2916710603	FLAT SEAL RING	1	
9	NS	NOT SERVICEABLE	2	
10	E2916710602	SEALING WASHER	2	
11	E07506189	JOINT 14X20X1.5 THICK	4	
12	E07500819	BANJO BOLT	2	
13	E10T120001	HIGH PRESSURE PIPE ASSLY	1	
14	E1441570056	BANJO BOLT OVERFLOW	1	
14	E200190002	BANJO BOLT	1	PCA Engine
15	E40000687	JOINT	2	
15	E200467003	JOINT	2	PCA Engine
16	E7101901012	BANJO BOLT PUMP INLET	1	
17	E904467015	JOINT	2	REAR MTG APPLN
18	E43527184	FUEL PIPE (FILTER TO FUEL PUMP)	2	
19	E10T120010	OVERFLOW PIPE COMMON	1	
19	E10T120015	OVERFLOW PIPE (THREE WAY) (PCA ENGINE)	1	PCA Engine
20	E43527185	FUEL PIPE (FEED PUMP TO FILTER)	1	
21	E10T120016	INJECTOR BANJO -OVER FLOW PIPE	1	PCA Engine

PLATE-19
FEED PUMP

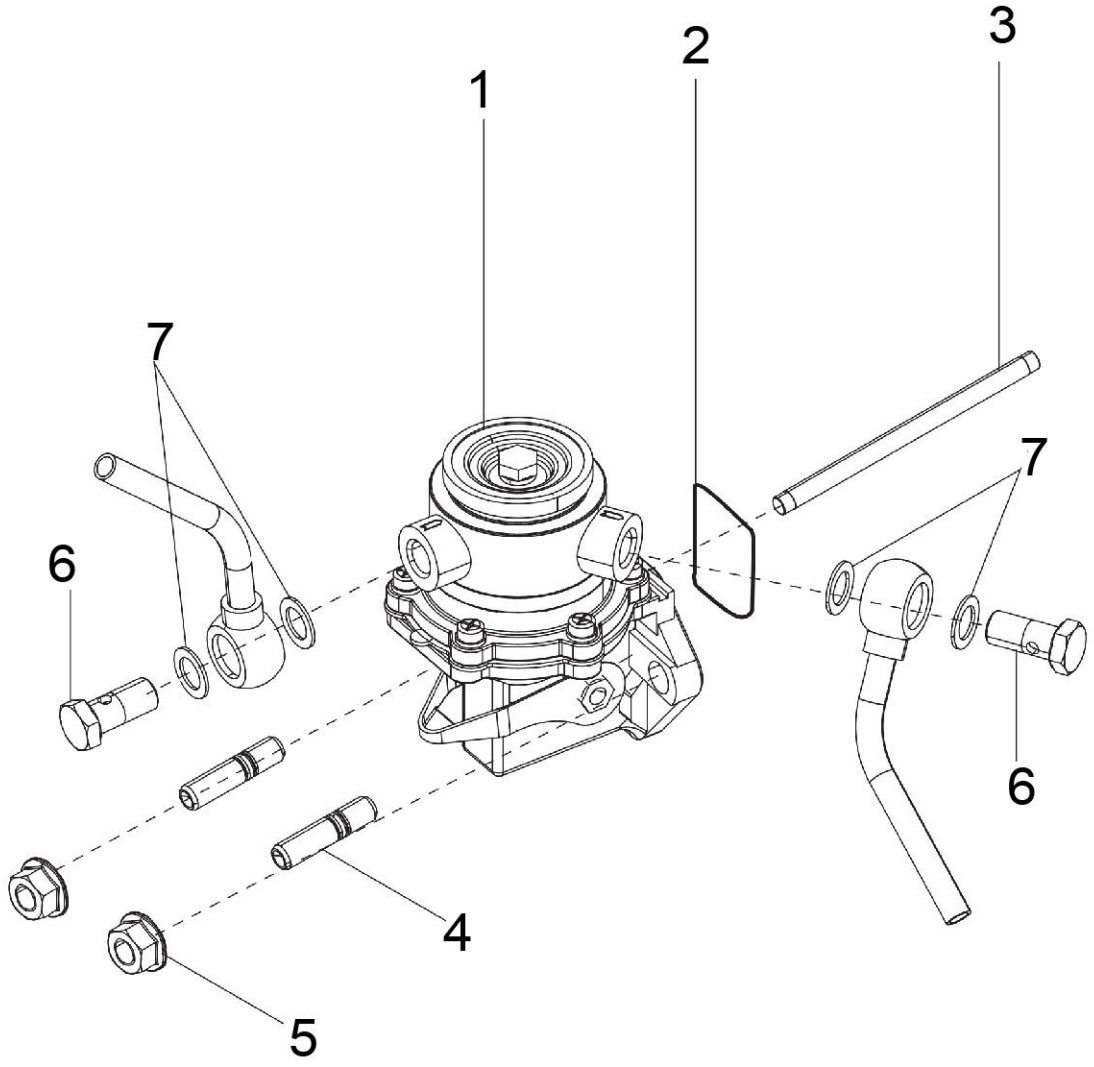

PLATE-19

FEED PUMP

Fig. No.	Part No.	Description	Qty	Remarks
1	E10G120009	FEED PUMP	1	AUTO-LEC/ SHRIVIK
2	E10G110015	O-RING	1	
3	ED41931	PIN FOR FEED PUMP (BSII)	1	
4	E50000506	STUD M8X1.25X34	2	
5	E07502810	COLLAR NUT M8 X 1.25	2	
6	E91901030	BANJO BOLT - FEED PUMP	2	
6	E60000831	BANJO BOLT M10X1 (PCA ENGINE)	2	PCA Engine
7	E283467036	JOINT	4	

PLATE-20

AIR_FILTER_MTG_&_ENGINE_HOSE

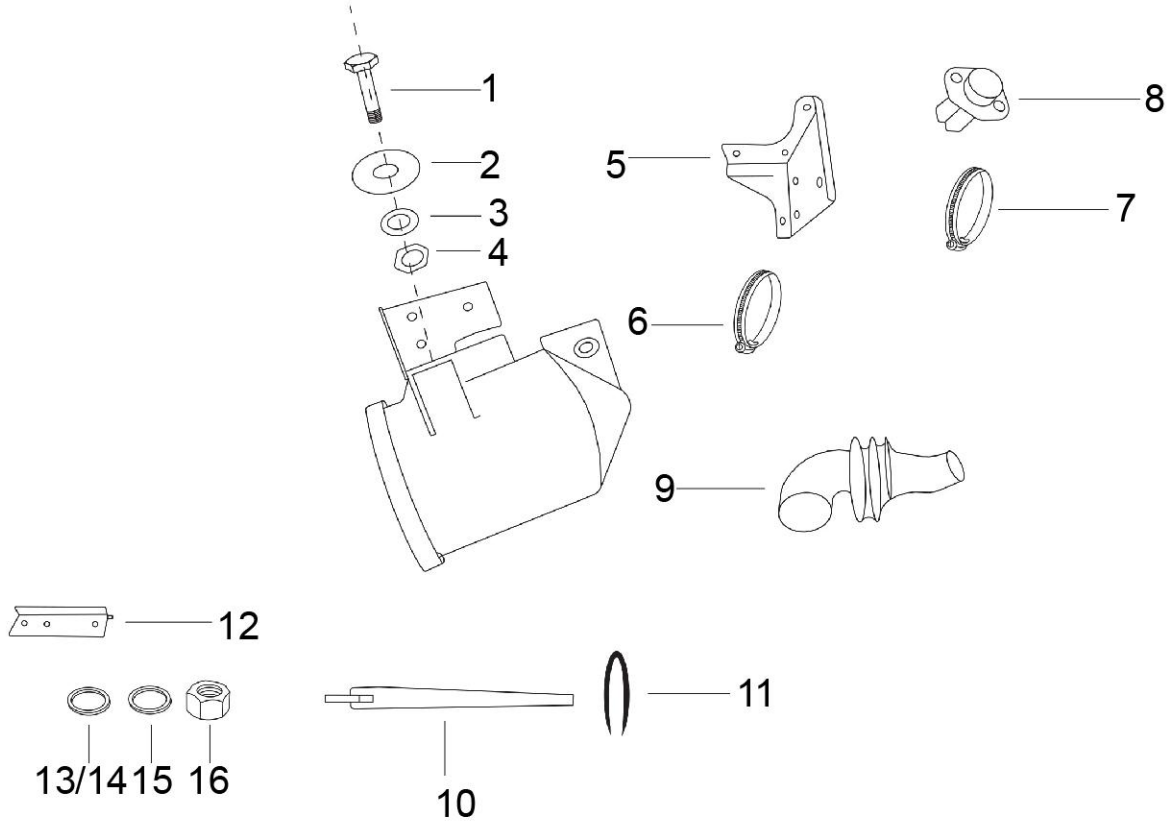

PLATE-20

AIR_FILTER_MTG_&_ENGINE_HOSE

Fig. No.	Part No.	Description	Qty	Remarks
1	031090	HEXAGONAL SCREW	3	
2	604973	PLAIN WASHER M6	3	
3	016406	SPRING WASHER	3	
4	020106	HEXAGONAL NUT	3	
5	B076536	BRACKET FOR FILTER MTG	1	
6	604553	WORM CLIP	3	
7	604756	HOSE CLIP	1	
8	611621	PLASTIC FLANGE ENGINETECH (N.I.)	1	
9	B075483	HOSE AIR FILTER TO ENGINE- CITY PTL BSIV	1	
10	B009290	STRAP ASSY.	1	
11	632413	RUBBER PACKING (N.I.)	1	
12	632412	BKT. STRAP HOLDING	1	
13	003056	PLAIN WASHER	2	
14	013880	PLAIN WASHER	2	
15	016406	SPRING WASHER	4	
16	020106	HEXAGONAL NUT	4	

PLATE-21

ENGINE_SIDE_COVER_AND_MAIN_HOUSING

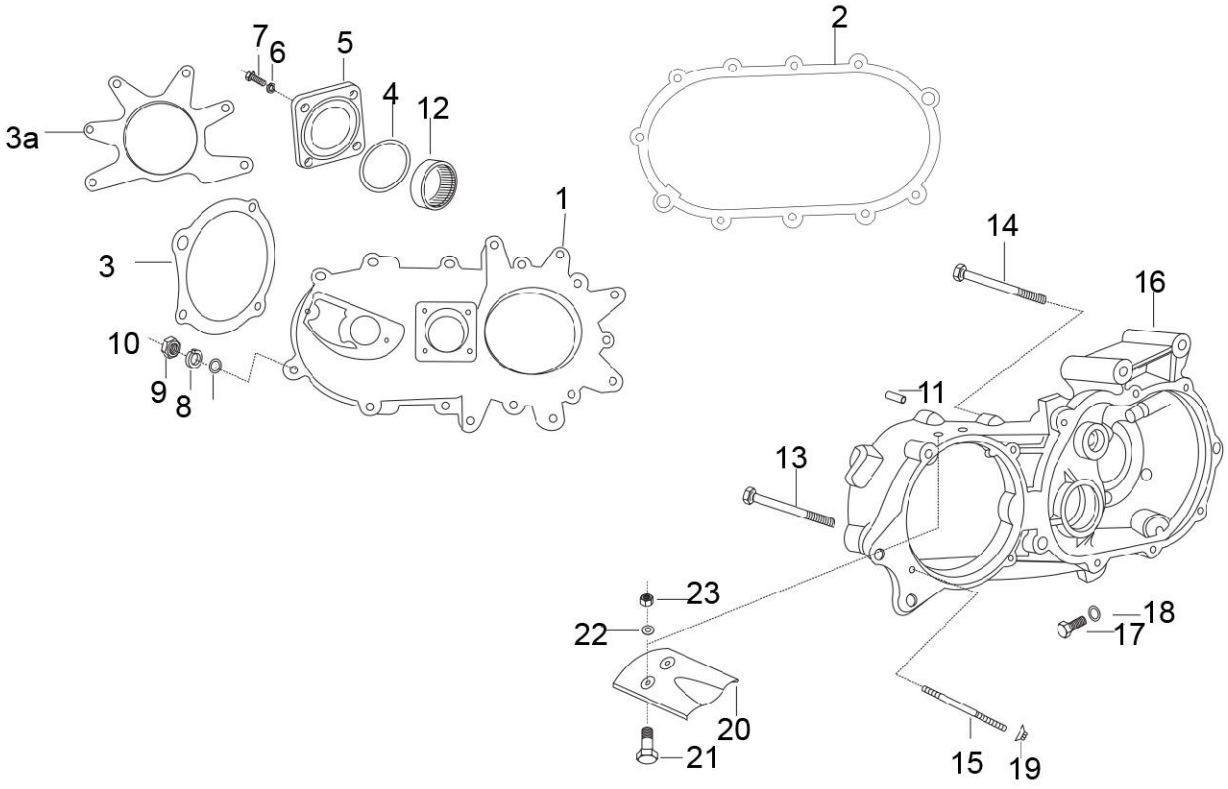

PLATE-21

ENGINE_SIDE_COVER_AND_MAIN_HOUSING

Fig. No.	Part No.	Description	Qty	Remarks
1	1F0007564	ENGINE COVER SIDE (EXT. MTG)	1	
2	B001844	GASKET ENGINE SIDE COVER	1	
3	129001014	GASKET ENGINE PTO FACE (4 STUD)	1	
3A	B001501	GASKET PTO COVER & ENGINE SIDE COVER	1	
4	825420215	O RING - COVER PLATE	1	
5	520221019R	COVER PLATE (E/SIDE COVER)	1	
6	807000647	CONICAL LOCK WASHER M6	4	
7	1A016964	CSK PHILIPS HEAD SCREW	4	
8	120204015R	WASHER (ALT)	11	
9	016406	SPRING WASHER	11	
10	020105	HEXAGONAL NUT	11	
11	127102010	HOLLOW DOWEL (G. BOX ESC)	2	
12	120212012	NEEDLE BUSH	1	
13	B042798	FLANGED HEXAGONAL HEAD SCREW M8X45	2	
14	B042799	FLANGED HEXAGONAL HEAD SCREW M8X40	9	
15	819064530	SOCKET HEAD CAP SCREW M6X45	4	
16	1A010094	MAIN HOUSING	1	Old
16	1A016604	MAIN HOUSING	1	New aluminiun clutch
17	811081025	HEX HEAD SCREW M8 X 10 (DRAIN PLUG)	1	
18	003056	PLAIN WASHER	1	
19	016406	SPRING WASHER	6	
20	127911019	OIL DEFLECTOR CLUTCH	1	
21	567741	HEX HEAD SCREW M5 X 18 (811051824)	2	
22	127912013	FIBER WASHER OIL DEFLECTOR	2	
23	12136	NUT / NYLOCK NUT M5	2	
24	B076830	GB EXT.MTG.(W/O CLUTCH ASSLY) PASS. STD	1	

PLATE-22

MAINSHAFT_SPEED_GEARS AND CLUSTER GEAR

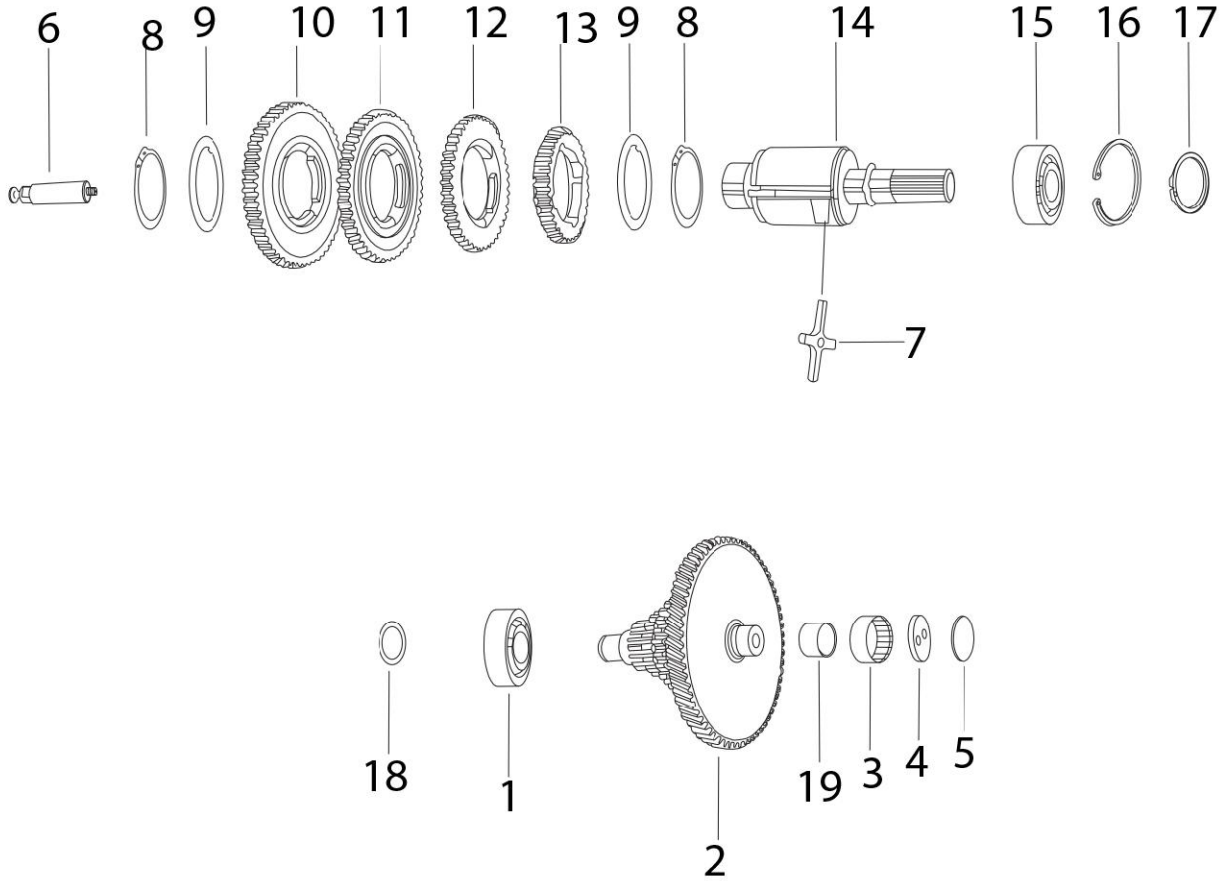

PLATE-22

MAINSHAFT_SPEED_GEARS AND CLUSTER GEAR

Fig. No.	Part No.	Description	Qty	Remarks
1	30209R	BALL BEARING FRONT WHEEL HUB	1	
2	1A010698R	CLUSTER GEAR	1	
3	884222808	NEEDLE BUSH 22X28X12	1	
4	120204015R	WASHER (ALT)	1	
5	120205019	SHIM HARD BUSH	1	
6	523021018	STEM GEAR OPERATING	1	
7	B003924	CROSS	1	
8	842004808	CIRCLIP DIA.48 (EXT)	2	
9	523011013R	SHOULDER RING	2	
10	1A009578R	SPEED GEAR 1ST	1	
11	1A010700R	SECOND SPEED GEAR (VE}	1	
12	127303016R	SPEED GEAR 3RD	1	
13	127306513R	SPEED GEAR 4TH	1	
14	127451019R	MAIN SHAFT	1	
15	880255211R	DEEP GROOVE BALL BEARING 25X52X15	1	
16	841005207	CIRCLIP DIA 52 (INT)	1	
17	842002501	CIRCLIP DIA 25 (EXT)	1	
18	842001507	CIRCLIP DIA 15 (EXT)	1	
19	122032014	INNER RING - CLUSTER GEAR	1	

PLATE-23

GEAR_SHIFTER_AND_ITS_CONTROL_MECHANISM

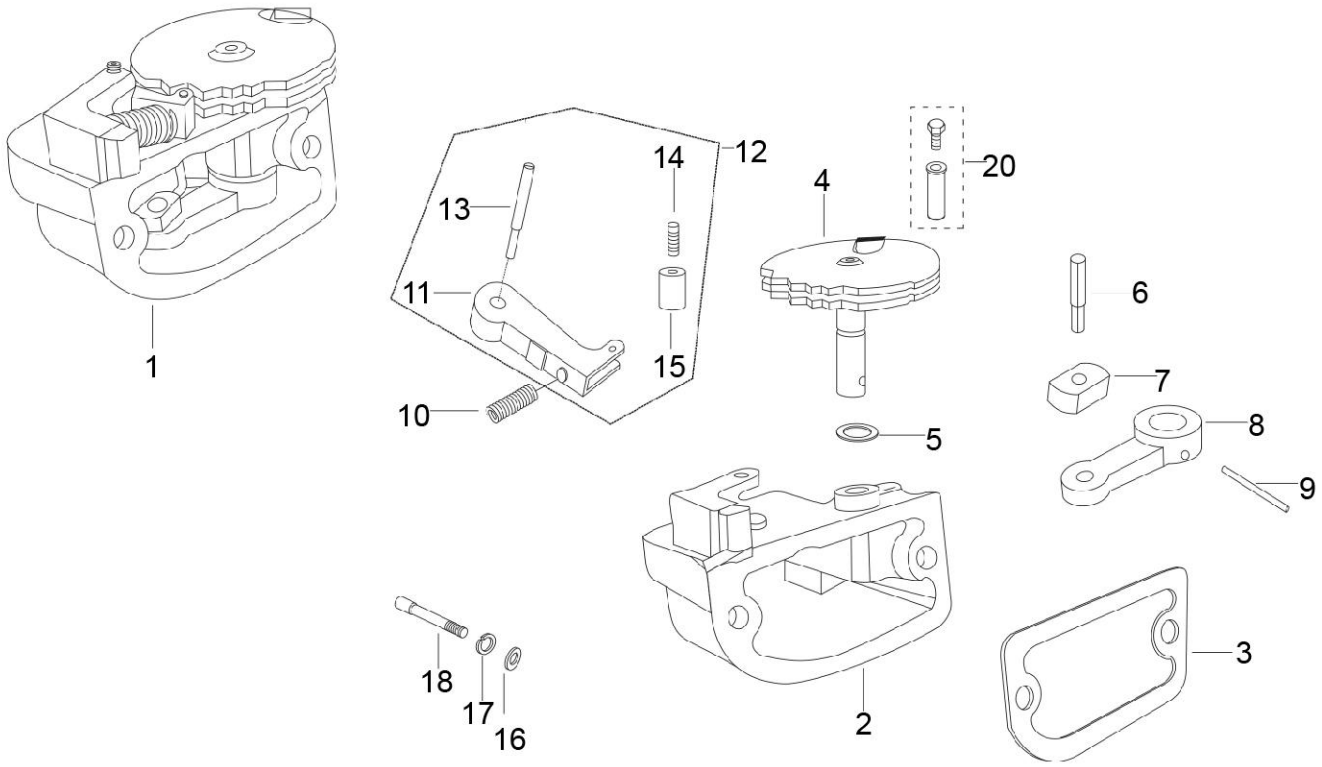

PLATE-23

GEAR_SHIFTER_AND_ITS_CONTROL_MECHANISM

Fig. No.	Part No.	Description	Qty	Remarks
1	127640012P	COMPLETE GEAR SHIFTER HSG ASSLY	1	
2	127641016	GEAR SHIFTER HOUSING	1	
3	128081017	GASKET HOUSING GEAR SHIFTER HOUSING	1	
4	SPB042620	SECTOR AND CONNECTOR PLATE AND LEVER ASSLY.	1	
5	825080209	O - RING - (SECTOR PLATE ASSY.)	1	
6	126022017	PIN FOR SLIDER BLOCK	1	
7	126021013	SLIDER BLOCK	1	
8	SPB042620	SECTOR AND CONNECTOR PLATE AND LEVER ASSLY.	1	
9	126004015	TAPER PIN (FOR LEVER)	1	
10	126003011	SPRING GEAR SHIFTER ASSY.	1	
11	126060019	BRACKET ASSY.	1	
12	SP126050014	BKT. WITH ROLLER ASSLY - SPD	1	
13	126054010	SCREW FOR BRACKET	1	
14	126053016	PIN FOR ROLLER	1	
15	126052012	ROLLER	1	
16	003056	PLAIN WASHER	2	
17	016406	SPRING WASHER	2	
18	819064530	SOCKET HEAD CAP SCREW M6X45	2	
19	B042620	SECTOR & CONNECTOR PLATE AND LEVER ASSY.	1	
20	604560	SCREW TERMINAL ASSY. - GEAR CONTROL	2	

PLATE-25

CLUTCH_AND_CLUTCH_COVER

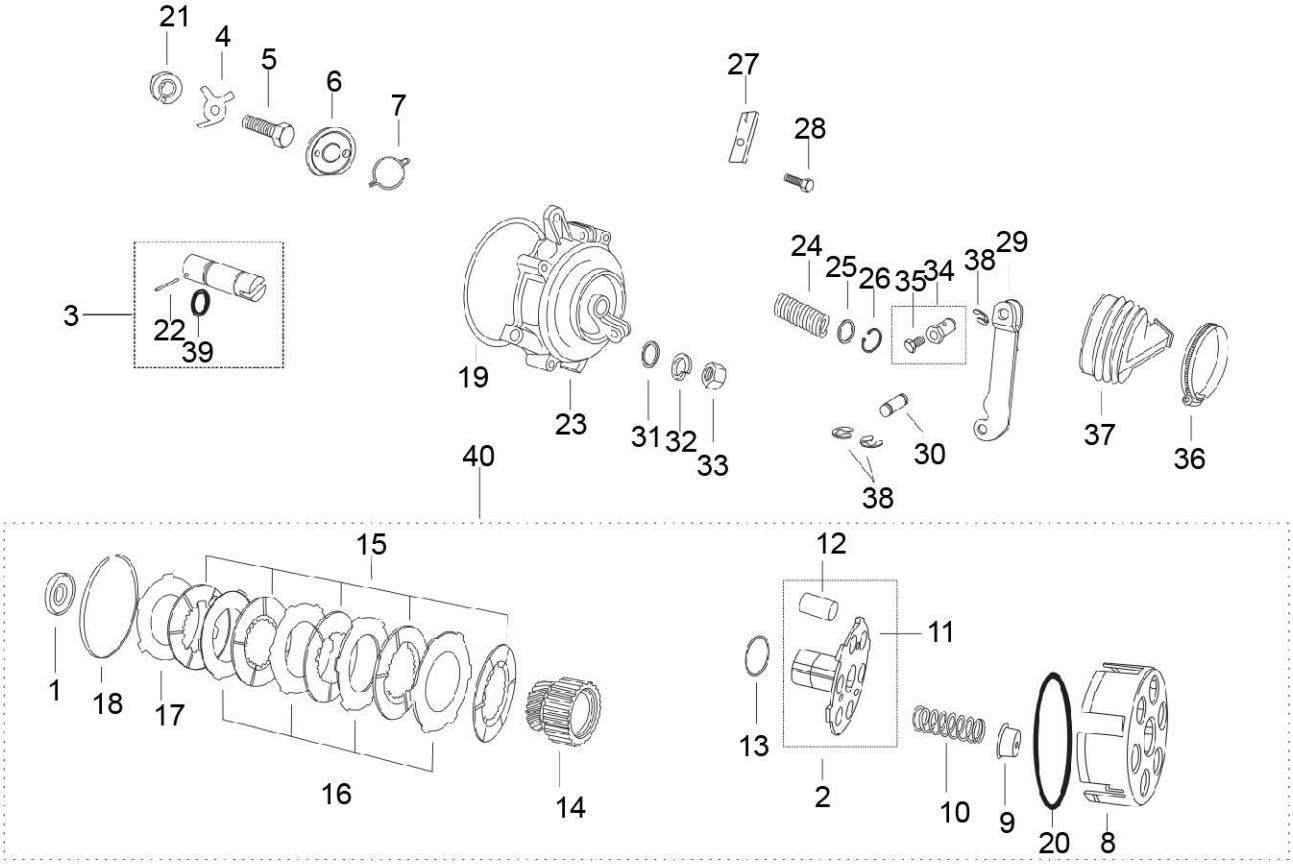

PLATE-25
CLUTCH_AND_CLUTCH_COVER

Fig. No.	Part No.	Description	Qty	Remarks
1	652124	SPACER WASHER-CLUTCH	1	
2	1F000755	CLUTCH SHAFT ASSY. (IMPROVED)	1	
3	1A001457	PLUNGER SHAFT	1	
4	129012013	TAB WASHER	1	
5	E47177007	SCREW M8X1.25X30	1	
6	1A011547R	THRUST BEARING	1	
7	286406	SPRING CLIP	1	
8	1A001455	CLUTCH HOUSING	1	
9	127757011	CUP - CLUTCH SPRING	6	
10	B023890	CLUTCH SPRING	6	
11	1F000755	CLUTCH SHAFT ASSY. (IMPROVED)	1	
12	NS	NOT SERVICEABLE	1	Not Serviceable
13	127758015	SHIM	1	
14	1F000754	ENGINE GEAR (MANTANO)	1	
15	127530011	DRIVEN PLATE ASLY	5	
16	127692015	DRIVING PLATE THK. 2.0 MM	4	
17	127693019	PRESSURE PLATE OUTER (VE)	1	
18	127754019	CIRCLIP - CLUTCH BOX	1	
19	825123207	O - RING CLUTCH COVER	1	
20	1A005414R	RING CLUTCH BOX	1	
21	129011019	WASHER FOR CLUTCH ASSY.	1	
22	822031942	SPRING PIN 3 X 19	1	
23	1A011662	CLUTCH COVER	1	
24	127185012	SPRING - CLUTCH COVER	1	
25	120164019	RETAINING PLATE	1	
26	842001600	CIRCLIP DIA.16(EXT)	1	
27	127471019	BRACKET CLUTCH CABLE GUIDE	1	
28	31092	HEX. HD SCREW M6X25	1	
29	127460010	LINK ASSLY - CLUTCH (IMPROVED)	1	
30	127013013	PIN CLUTCH	1	
31	003056	PLAIN WASHER	4	
32	016406	SPRING WASHER	4	
33	020106	HEXAGONAL NUT	4	
34	B024379	SCREW TERMINAL ASSLY-ENGINE STOP,D.C.	1	
35	120238016	BOLT FOR SCREW TERMINAL	1	

PLATE-25

CLUTCH_AND_CLUTCH_COVER

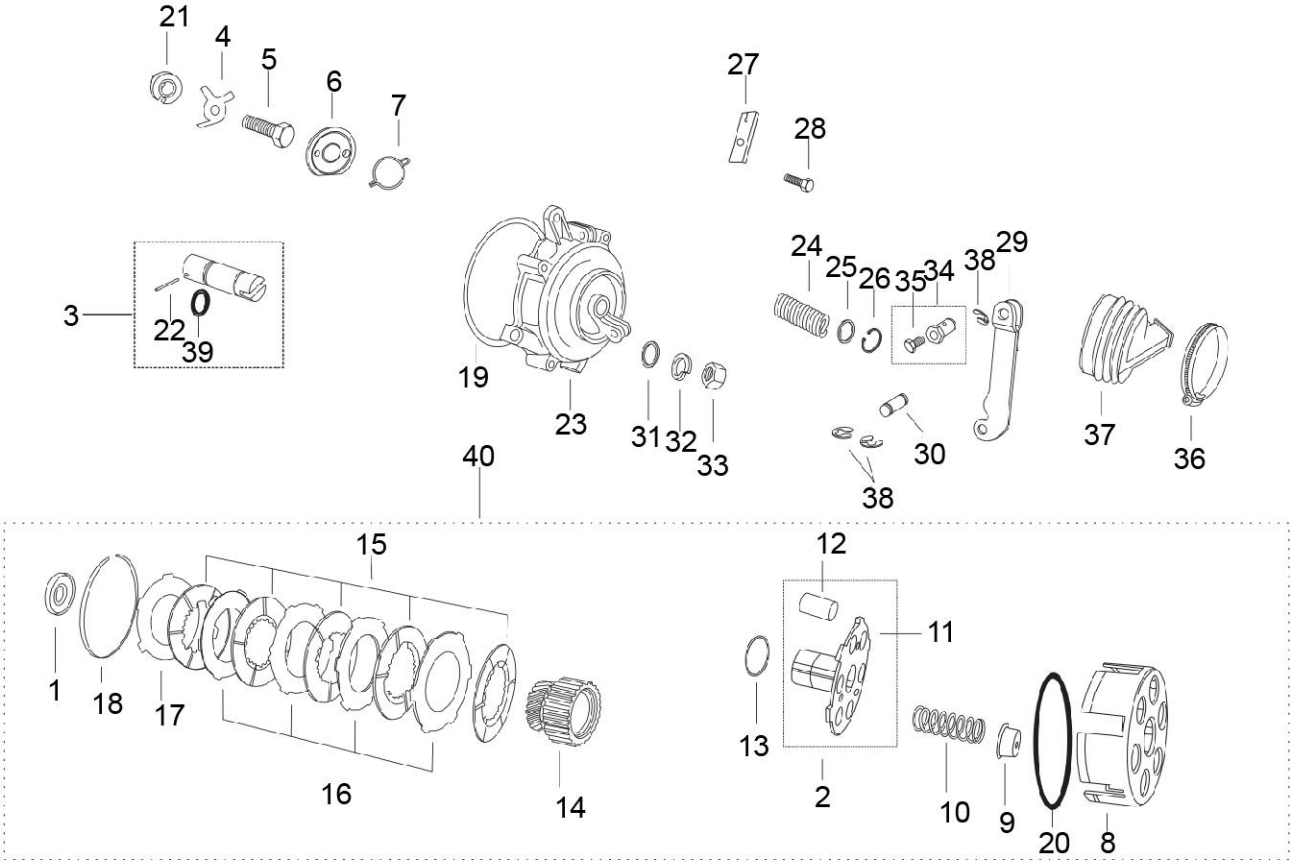

PLATE-25

CLUTCH_AND_CLUTCH_COVER

Fig. No.	Part No.	Description	Qty	Remarks
36	120170018	HOSE CLIP - CLUTCH COVER BELOW	1	
37	127012019	BELLOW CLUTCH ACTUATING	1	
38	843000809	CIRCLIP DIA.8(EXT) TYPE C	3	
39	B019220	O- RING (PLUNGER SHAFT)	1	
40	1F000832	CLUTCH ASSY	1	

PLATE-26

ENGINE_SUPPORT

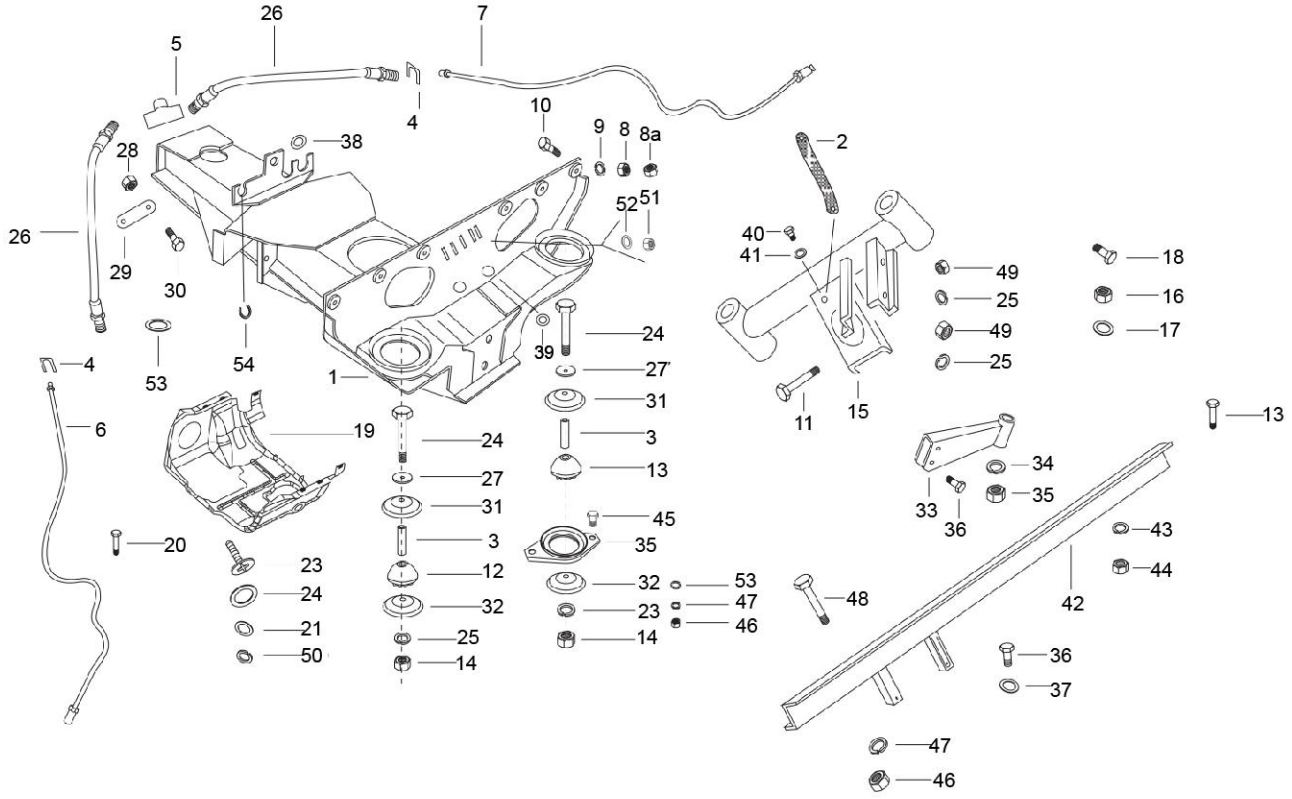

PLATE-26

ENGINE_SUPPORT

Fig. No.	Part No.	Description	Qty	Remarks
1	660457R	FRAME ASSY SUSPENSION & ENGINE SUPPORT	1	
2	644839R	EARTHING CABLE	1	
3	267065	SPACER FRONT	3	
4	136916	PLATE FOR RETAINING THE BRAKE FLEX. PIPE	3	
5	643692	THREE WAY UNION	1	
6	644813	BRAKE PUMP TUBE OF LEFT REAR WHEEL	1	
7	644812	BRAKE PUMP TUBE OF RIGHT REAR WHEEL	1	
8	020108	HEXAGONAL NUT	6	
9	016408	SPRING WASHER	6	
10	31119	HEX HD SCREW M8 X 25	6	
10A	632247	HEX HDD SCREW M10X30 CC8.8	2	
11	272178	HEX. HDD BOLT M8 X 122 CL 10.9	2	
12	265091P	DUMPER ENGINE MOUNTING	3	
13	265091P	DUMPER ENGINE MOUNTING	1	
14	15335	HEX HD NUT M8	3	
15	643711R	FRT CROSS MEMBER ASSY. ENG. MTG.	1	
16	231370	SELF BREAKING NUT M10	2	
17	286328	PLAIN WASHER 20X10.2X2	2	
18	568689	HEX HEAD BOLT M10X100	2	
19	569182	ENGINE COVER	1	
20	604606	HEX HD. SCREW M5X20 CL8.8	2	
21	003055	RAW WASHER(808000527)	3	
22	006078	WASHER	3	
23	15911	PAN SELF TAP SCREW 8SG X 16 AB	6	
24	272178	HEX. HDD BOLT M8 X 122 CL 10.9	2	
25	016408	SPRING WASHER	3	
26	587624R	FLEXIBLE PIPING FOR FRONT WHEEL BRAKE R	2	
27	002383	PLAIN WASHER M20X8.5X2	4	
28	15235	NYLOCK NUT M10	2	
29	632299	PLATE	2	
30	31159	HEX HD SCREW M10 X 35 CC 8.8	2	
31	569377	PLATE	2	
32	569244	PLATE	2	
33	587533	SUPPORT ARM ENGINE RR SUB-ASSLY WITH IP	1	
34	016410	SPRING WASHER	2	

PLATE-26

ENGINE_SUPPORT

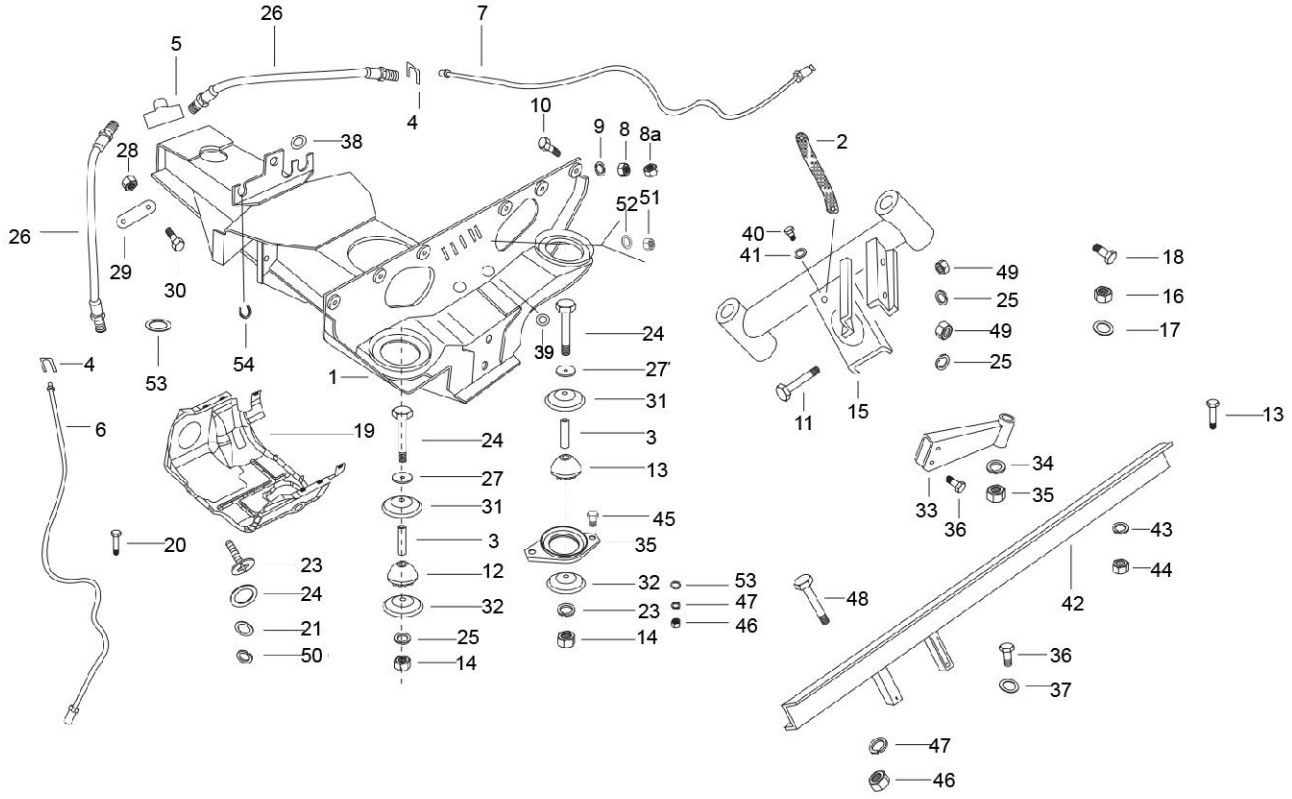

PLATE-26

ENGINE_SUPPORT

Fig. No.	Part No.	Description	Qty	Remarks
35	B024614	HEX HEAD BOLT M10X45 CL 10.9	2	
36	20110	HEX NUT M10	2	
35	567524	REAR RUBBER BUMPER SUPPORT	1	
36	31154	HEX HDD SCREW M10X22 CL 8.8	2	
37	286328	PLAIN WASHER 20X10.2X2	6	
38	178610	GROMMET	1	
39	15478	GROMMET4	2	
40	31116	HEX HD. SCREW M8X16	3	
41	003058	PLAIN WASHER 15X8.4X1.5	1	
42	B001648	CROSS MEMBER ENGINE SUPPORT REAR SUB - ASSLY WITH I.P	1	
43	016408	SPRING WASHER	2	
44	020108	HEXAGONAL NUT	2	
45	31118	SCREW M8X20	2	
46	020108	HEXAGONAL NUT	4	
47	016410	SPRING WASHER	6	
48	568260	HEX HD BOLT M8X160 CL 8.8	2	
49	20110	HEX NUT M10	4	
50	16405	SPRING WASHER M5	2	
51	020105	HEXAGONAL NUT	2	
52	003055	RAW WASHER(808000527)	2	
52	006078	WASHER	2	
53	286328	PLAIN WASHER 20X10.2X2	2	
54	568140	GROMMET	1	

PLATE-27

CHASSIS FRAME, FUEL TANK & SEAT

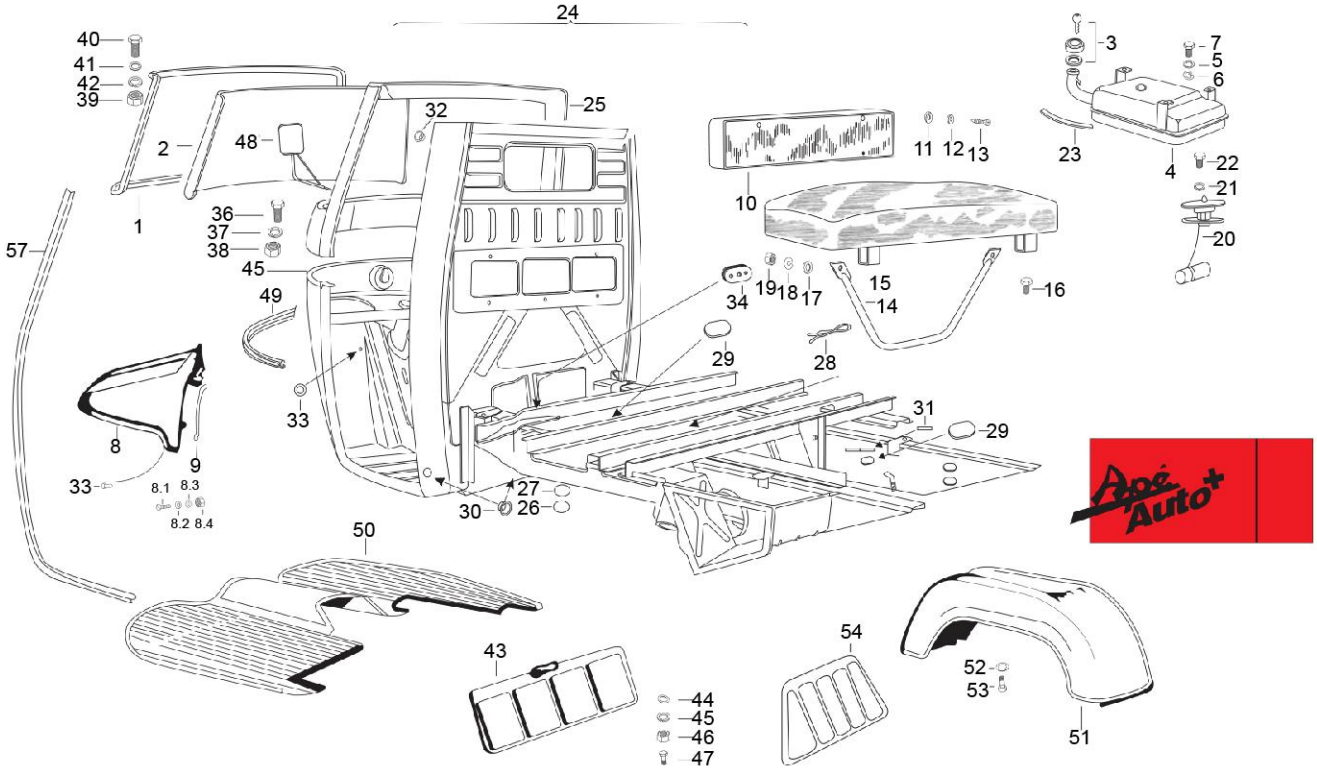

PLATE-27

CHASSIS FRAME, FUEL TANK & SEAT

Fig. No.	Part No.	Description	Qty	Remarks
1	B073626	WINDSHIELD PACKING	1	
2	B073601	LAMINATED WINSHIELD GLASS	1	E - Marked (Export)
3	B024170	DIESEL TANK CAP WITH KEY	1	
4	B078375	FUEL TANK ASSLY WITH TANK UNIT (VE)	1	
5	013880	PLAIN WASHER	4	
6	016406	SPRING WASHER	4	
7	31088	HEX HD SCREW M6 X 16 CL 8.8 (811061623)	4	
8	B075974	FRONT MUDGUARD	1	
8.1	31092	HEX. HD SCREW M6X25	2	
8.2	078307	SPRING WASHER	4	
8.3	013880	PLAIN WASHER	4	
8.4	020106	HEXAGONAL NUT	2	
9	B076801	FRONT MUDGUARD RUBBER BEADING	1	
9	B076802	FRONT MUDGUARD PARTITION RUBBER BEADING	1	
10	661627	DRIVER BACK REST (PASS.) (VE)	1	
10	661627	DRIVER BACK REST (PASS.) (VE)	1	
11	16405	SPRING WASHER M5	4	
12	16603	PLAIN WASHER (METALLIC)	4	
13	604606	HEX HD. SCREW M5X20 CL8.8	4	
14	-	NOT SERVICEABLE	1	Not Serviciable
15	B078043	PASS DRIVER SEAT ASSY- APE AUTO PLUS	1	
16	31119	HEX HD SCREW M8 X 25	2	
17	003058	PLAIN WASHER 15X8.4X1.5	2	
18	016408	SPRING WASHER	2	
19	020108	HEXAGONAL NUT	2	
20	567878R	TANK UNIT	1	
21	16405	SPRING WASHER M5	6	
22	B077750BL	MAIN FRAME ASSLY 501 PASS (D+5)- BLACK	1	
22	B077750BW	MAIN FRAME ASSLY 501 PASS (D+5)- BW	1	
22	B077750GY	MAIN FRAME ASSLY 501 PASS (D+5)- GY	1	
22	B077750EG	MAIN FRAME ASSLY 501PASS (D+5)-EG	1	
23	587763	BREATHER PIPE	1	
24	31054	HEX HD. SCREW M5X10 CL8.8	6	
25	B073602ED	WINDSCREEN FRAME (COMPLETE)	1	
26	128009	CAPSULE	1	

PLATE-27

CHASSIS FRAME, FUEL TANK & SEAT

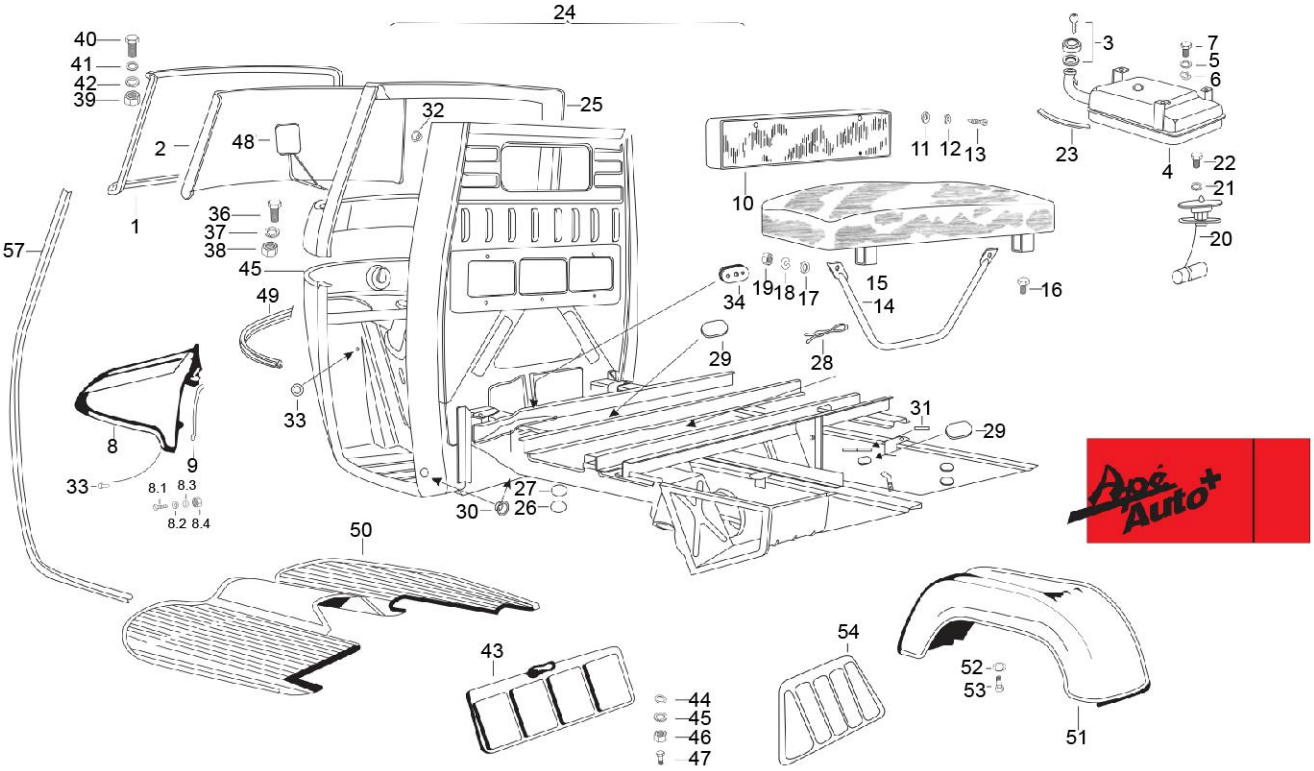

PLATE-27

CHASSIS FRAME, FUEL TANK & SEAT

Fig. No.	Part No.	Description	Qty	Remarks
27	128010	CAP	1	
28	568682	FASTENER	2	
29	190255	GROMMET (LONG MEMBER)	5	
30	190255	GROMMET (LONG MEMBER)	4	
31	125998	PLUG	5	
32	125998	PLUG	2	
33	568131	PLUG DOME DIA. 21 MM - CAB BEHIND HL	4	
35	105392	GROMMET	1	
36	568154	CUT GROMMET FOR HORN	1	
37	B001386	HEX HEAD SCREW M5X20	9	
38	16405	SPRING WASHER M5	9	
39	020105	HEXAGONAL NUT	9	
40	30072	HEX HEAD BOLT M8 X 35	2	
41	13861	PLAIN WASHER 20X8.2X2.5	2	
42	016408	SPRING WASHER	2	
43	116103	MUD FLAP FRONT	2	
44	013880	PLAIN WASHER	4	
45	016406	SPRING WASHER	4	
46	020106	HEXAGONAL NUT	4	
47	31088	HEX HD SCREW M6 X 16 CL 8.8 (811061623)	4	
48	B078071	REAR VIEW MIRROR LH (D5S)	1	
48	B078070	REAR VIEW MIRROR RH (D5S)	1	
49	B077719	DOME BEADING	1	
50	587662	CARPET	1	
51	B042612	REAR MUDGUARD RH/LH	2	
52	16603	PLAIN WASHER (METALLIC)	8	
53	604603	RIVET	8	
54	142424	MUDFLAP FOR RR MUDGUARD	2	
55	B078865	STICKER -APE AUTO D 5 S	1	
56	B024474	BEADDING LINING	1	
57	B074637	BEEDING DOME SIDE PILLAR (PET/DLS)	2	

PLATE-28

INNER PARTS OF CABIN FOR STD. MODEL

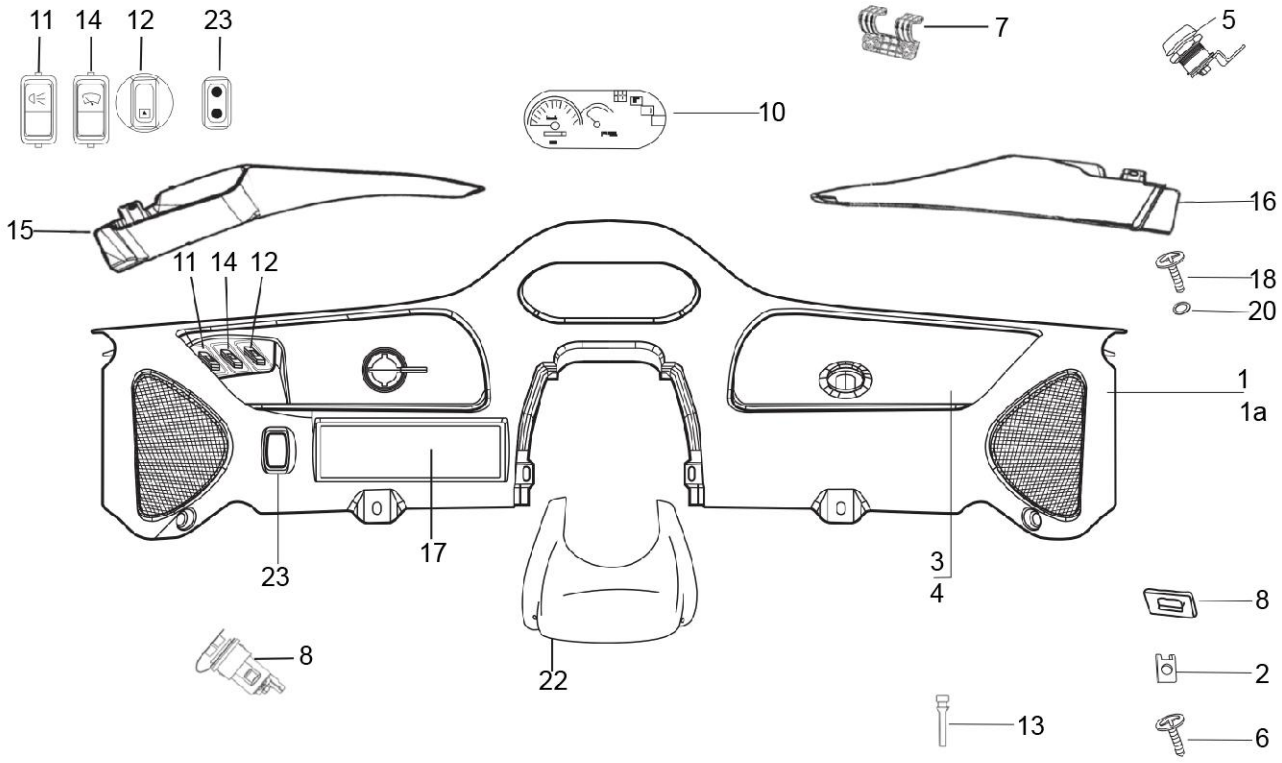

PLATE-28

INNER PARTS OF CABIN FOR STD. MODEL

Fig. No.	Part No.	Description	Qty	Remarks
1	B077535	DASHBOARD ASSLY. COMPLETE (D+5 DIESEL)	1	
1A	B073809	DASH BOARD ASSY.	1	
2	008080	SPRING PLATE	4	
3	B073810	GLOVE BOX COVER	1	
4	568671	GASKET - GLOW BOX COVER (N.I.)	4	
5	B024169	GLOVE BOX LOCK WITH KEY	1	
6	643691	BOLT LOCK PLATE	4	
7	B073814	HINGE	1	
8	B074905	MOBILE CHARGER	1	
9	643691	BOLT LOCK PLATE	1	
10	661510R	INSTRUMENT CLUSTER WITH SHIFTED SPEEDOMETER - (INDICATION)	1	
11	B073478	SWITCH 3 POSITION	1	
12	B073481	HAZARD WARNING SWITCH WITH CROWN CAP (12V)(VE)	1	
13	B074275	RUBBER DAMPER	2	
14	B073479	WIPER MOTOR SWITCH/ SWITCH WIPER MOTOR	1	
15	B073815	UPPER COVER DASH BOARD - LH	1	
16	B073816	UPPER COVER DASH BOARD - RH	1	
17	B073812	UTILITY BOX	1	
18	661925	PHILIP PAN HEAD SCREW (M5 X 0.8 X 1.6)	8	
19	B074262	PIN	2	
20	003054	PLAIN WASHER	8	

PLATE-29

REAR SUSPENSION

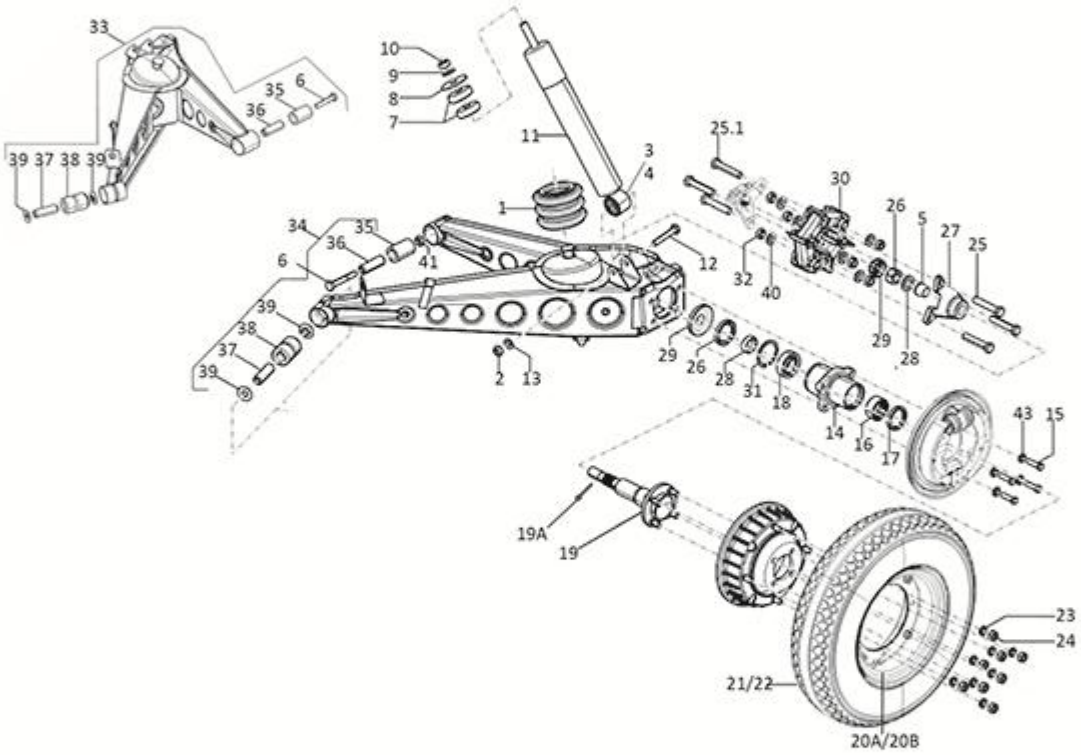

PLATE-29

REAR SUSPENSION

Fig. No.	Part No.	Description	Qty	Remarks
1	644897	ARM ASSLY RT RR SUS. WITH SILENT BLOCK (VE)	1	
1	644898	ARM ASSLY LT RR SUS. WITH SILENT BLOCK (VE)	1	
2	B078604	RUBBER BUMPER	2	
3	231370	SELF BREAKING NUT M10	2	
4	157103	BUSH - SHOCK ABSORBER	2	
5	107827	SPACER	1	
6	128633	CONE	2	
7	643741	HEX HDD BOLT M10 X 80 CL 12.9	4	
8	74414	RUBBER BUSH/BUFFER FOR COUPLING SHOCK ABSORBE	4	
9	006066	PL WASHER 10.5X38X9	2	
10	016410	SPRING WASHER	2	
11	20110	HEX NUT M10	2	
12	136451	SHOCK ABSORBER REAR	2	
13	267068	HEX HEAD BOLT M10 X 60 CC 10.9	2	
14	286328	PLAIN WASHER 20X10.2X2	2	
15	660931	WHEEL NUT (M12 X 1.5)	3	
16	152580	BRAKE DRUM APE - 501	2	
17	107870	ELASTIC RING	2	
18	108215	BOLT FOR AXLE M12 X 40	3	
18	652520	BOLT FOR AXLE M12 X 40 (VE WHEEL RIM)	3	
19	6C000060	WHEEL AXLE	2	
19	6C000060	WHEEL AXLE	2	(Modified)
19A	12790	SPLIT PIN	2	
20	661282	NEEDLE ROLLER BEARING	2	
21	136888	REAR WHEEL HUB	2	
22	20359	SEAL RING	2	
23	31159	HEX HD SCREW M10 X 35 CC 8.8	8	
24	016410	SPRING WASHER	8	
25	243303R	DEEP GROVE BALL BRG-RR WH AXLE	2	
26	006650	CIRCLIP DIA 50 (INT)	2	
27	15594	HEX HDD BOLT M10 X 35	6	
27.1	B024373	ALLEN BOLT M10X65 CL 10.9	6	
28	196302	OIL SEAL	2	
29	587617	ELASTIC JOINT CONNECTION HUB (WHL - SIDE)	2	
30	661267	RING	2	

PLATE-29

REAR SUSPENSION

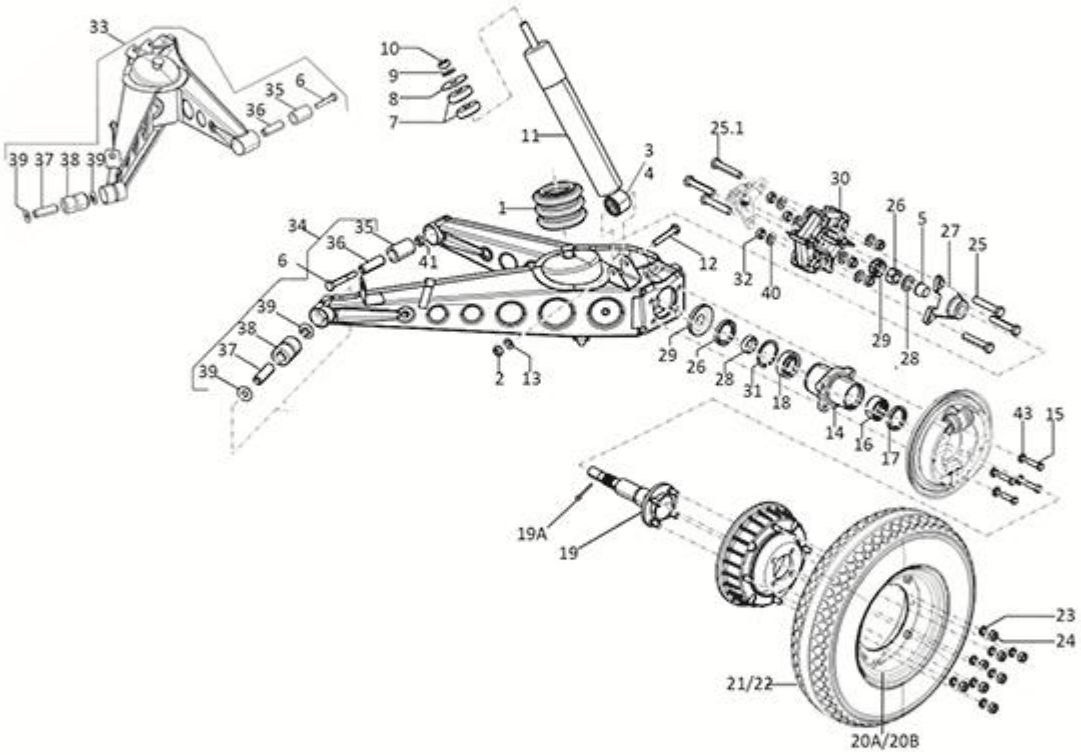

PLATE-29

REAR SUSPENSION

Fig. No.	Part No.	Description	Qty	Remarks
31	602120	LEFT BRAKE JAW HOLDING CABLE PLATE	1	
31	602123	RIGHT BRAKE JAW HOLDING CABLE PLATE	1	
32	109892	PROTECTION CUP RR HUB	2	
33	604535P	FLEXIBLE COUPLING	1	
34	003068	PLAIN WASHER	2	
35	231370	SELF BREAKING NUT M10	12	
36	137026	SPRING RING	2	
37	226662	RING FOR ELASTIC SUPPORT	2	
38	226661	INTERNAL BUSH	2	
39	267065	SPACER FRONT	2	
40	226596	BUSH FRONT RING FOR ELASTIC SUPPORT	2	
41	267064	SHOULDER WASHER	4	
42	237246	SHIM WASHER 20X10.2X1	12	
43	136426	NUT WITH COLLAR	2	
44	231370	SELF BREAKING NUT M10	4	

PLATE-30

STEERING COLUMN AND FRONT SUSPENSION

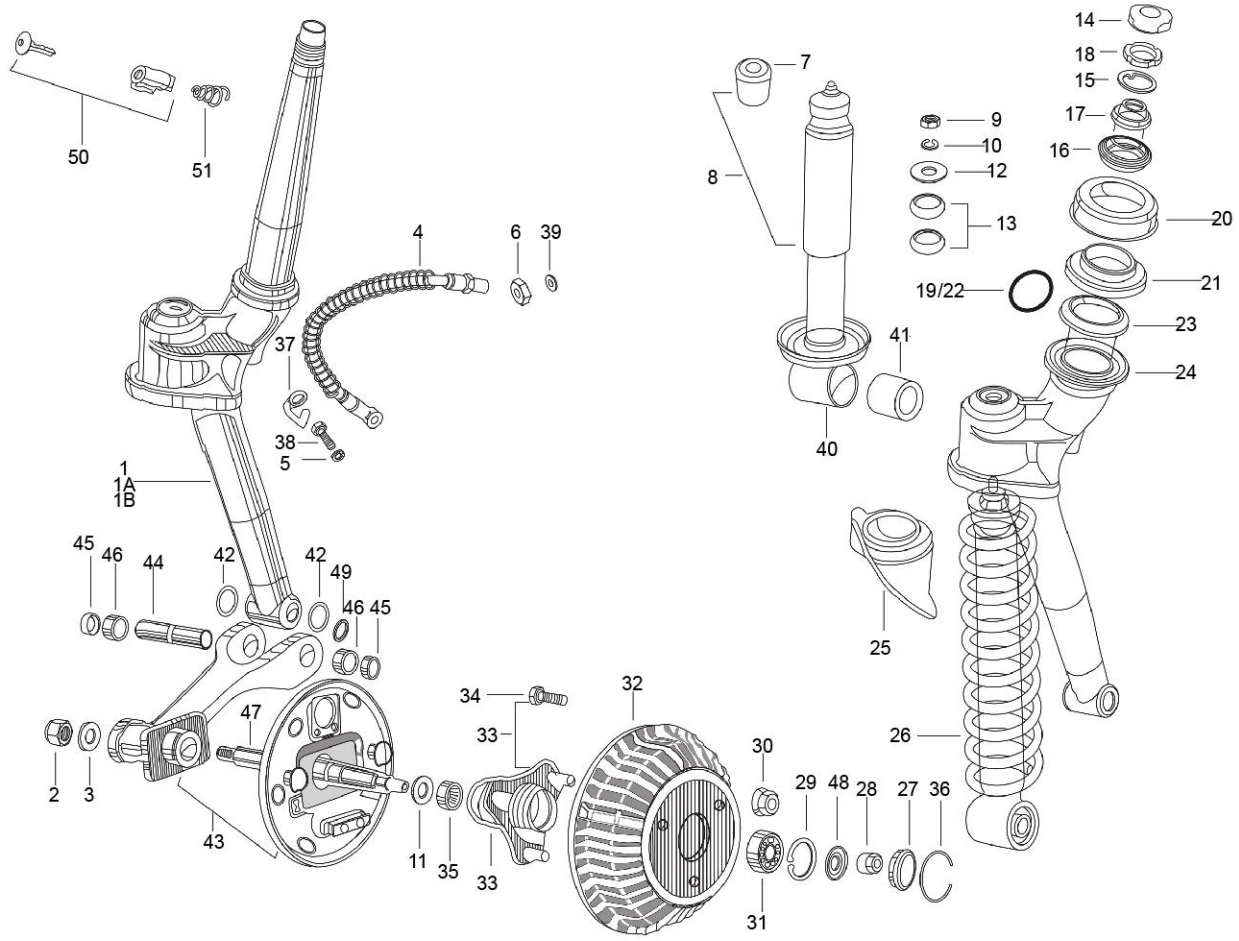

PLATE-30

STEERING COLUMN AND FRONT SUSPENSION

Fig. No.	Part No.	Description	Qty	Remarks
1	B076859	STEERING COLUMN ASSY	1	Common
1A	B076873SP	STEERING COLUMN ASSLY (NRB) -501 STD SPD	1	Pass
2	568095	NYLOCK NUT	1	
3	87067	PLAIN WASHER 30.5X14.3X2	1	
4	587624R	FLEXIBLE PIPING FOR FRONT WHEEL BRAKE R	1	
5	127927R	PACKING	2	
6	21216	HEX NUT M16 X 1.5	4	
7	75708	SILENT BLOCK	1	
8	569246RP	SHOCK ABSORBER FRONT	1	
9	20110	HEX NUT M10	1	
10	016410	SPRING WASHER	1	
11	136434	OIL SEAL	1	
12	006066	PL WASHER 10.5X38X9	1	
13	74414	RUBBER BUSH/BUFFER FOR COUPLING SHOCK ABSORBE	2	
14	604758	PROTECTION	1	
15	108873	STOP WASHER FOR HOLDING	1	
16	567990	BEARING RACE UPPER BOTTOM	1	
17	567991	BEARING RACE UPPER TOP	1	
18	108874	SECURING RING NUT	1	
19	662423	SOLID OIL BALL CAGE (UPPER) 7105	1	
20	109064	DUST COVER	1	
21	567992	BEARING RACE LOWER TOP	1	
22	662422	SOLID OIL BALL CAGE (LOWER) 7104	1	
23	567993	BEARING RACE LOWER BOTTOM	1	
24	109066	WASHER WITH PROTECTION FOR BEARING	1	
25	109265	SPLASH GUARD DUST COVER	1	
26	569255	FRONT SUSPENSION SPRING	1	
27	107871	CAP	1	
28	74521	NUT M14 X 1.5	1	
29	567473	CIRCLIP DIA. 42 INT. (841004203)	1	
30	660931	WHEEL NUT (M12 X 1.5)	3	
31	30209R	BALL BEARING FRONT WHEEL HUB	1	
32	152580	BRAKE DRUM APE - 501	1	
33	652521	FR. WHEEL HUB ASSY.	1	
34	108215	BOLT FOR AXLE M12 X 40	1	

PLATE-30

STEERING COLUMN AND FRONT SUSPENSION

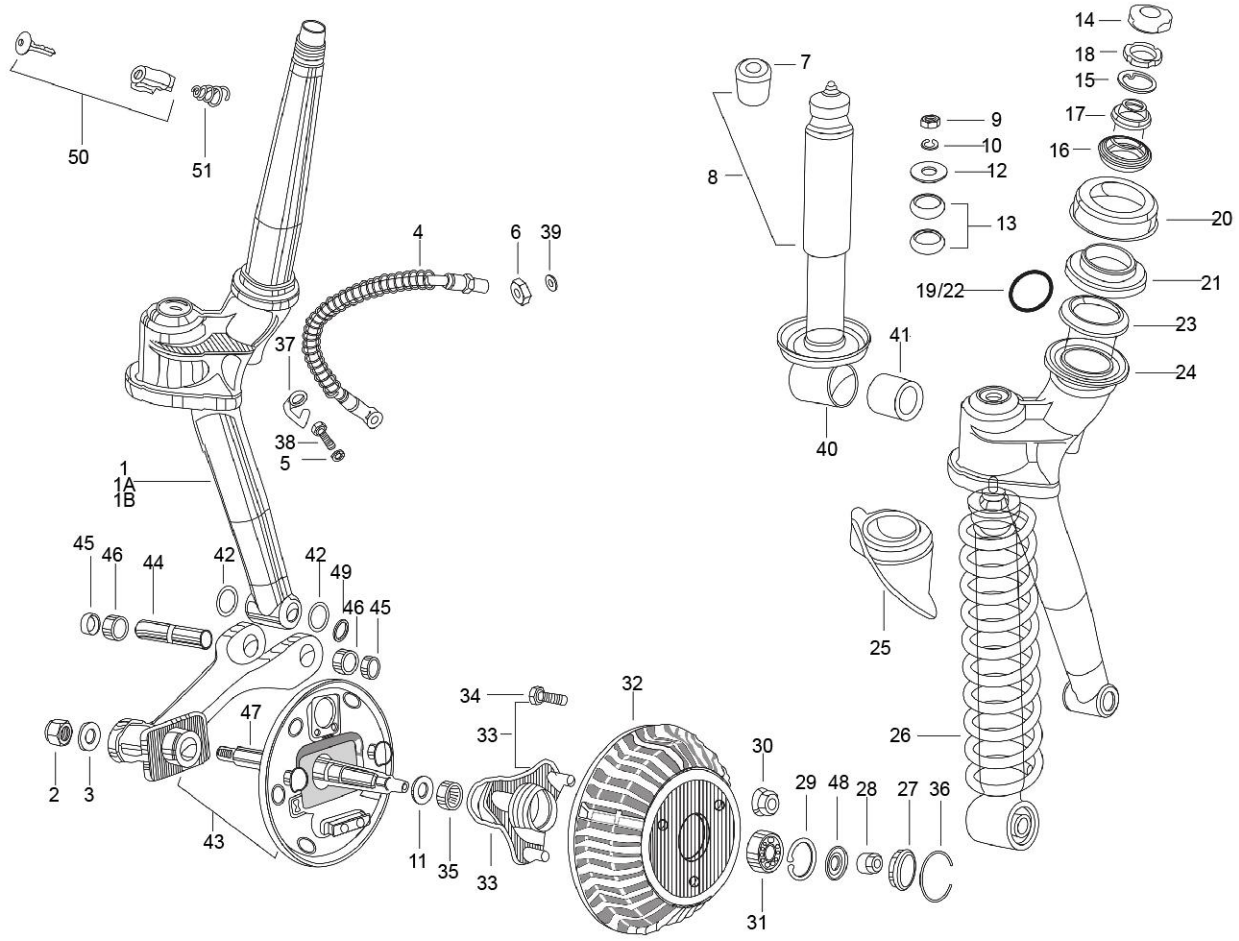

PLATE-30

STEERING COLUMN AND FRONT SUSPENSION

Fig. No.	Part No.	Description	Qty	Remarks
35	125289	NEEDLE BEARING, CRANKASE, FRONT WHEEL	1	
36	107870	ELASTIC RING	2	
37	B003228	LOCK PLATE FRONT BRAKE HOSE	1	
38	587829	BENJO BOLT	1	
39	48197	PL WASHER 24X16X1.5	3	
40	107732	BUSH FOR SILENT BLOCK	1	
41	109117	RUBBER BUSH (FRT SHOCK ABSORBER) / RING	1	
41	566545	RUBBER BUSH (FRT SHOCK ABSORBER) - MODIFIED	1	
42	006733	O RING	2	
43	616541	BRACKET WHEEL CARRIER WITH PI	1	
44	137235	STEERING PIN	1	
45	008771	OIL SEAL (18-24-4)	2	
46	107718	ROLLER BUSH	2	
47	643772R	FRONT WHEEL AXLE	1	
48	180431	COIN WASHER	1	
49	150579	RING FOR HOLDING TYPE J F101 17A	2	
50	B001561	STG LOCK ASSLY WITH KEY	1	
51	569150	SPRING; STEERING LOCK (MODIFIED)	1	
52	661231	CIRCLIP STEERING LOCK DIA 16 (INT)	1	
53	604759	RUBBER CAP STEERING COLUMN (N.I.)	1	
54	604758	PROTECTION	1	
55	940003	STEERING PIN KIT CONSISTING OF SR NOS 42,44,45,46,47 & 49	1	
56	KIT95021R	STEERING CONE SET (UPPER)	1	
57	KIT95022R	STEERING CONE SET (LOWER)	1	
58	KIT95010R	BALL KIT	1	

PLATE-31

HANDLE BAR AND CONTROL

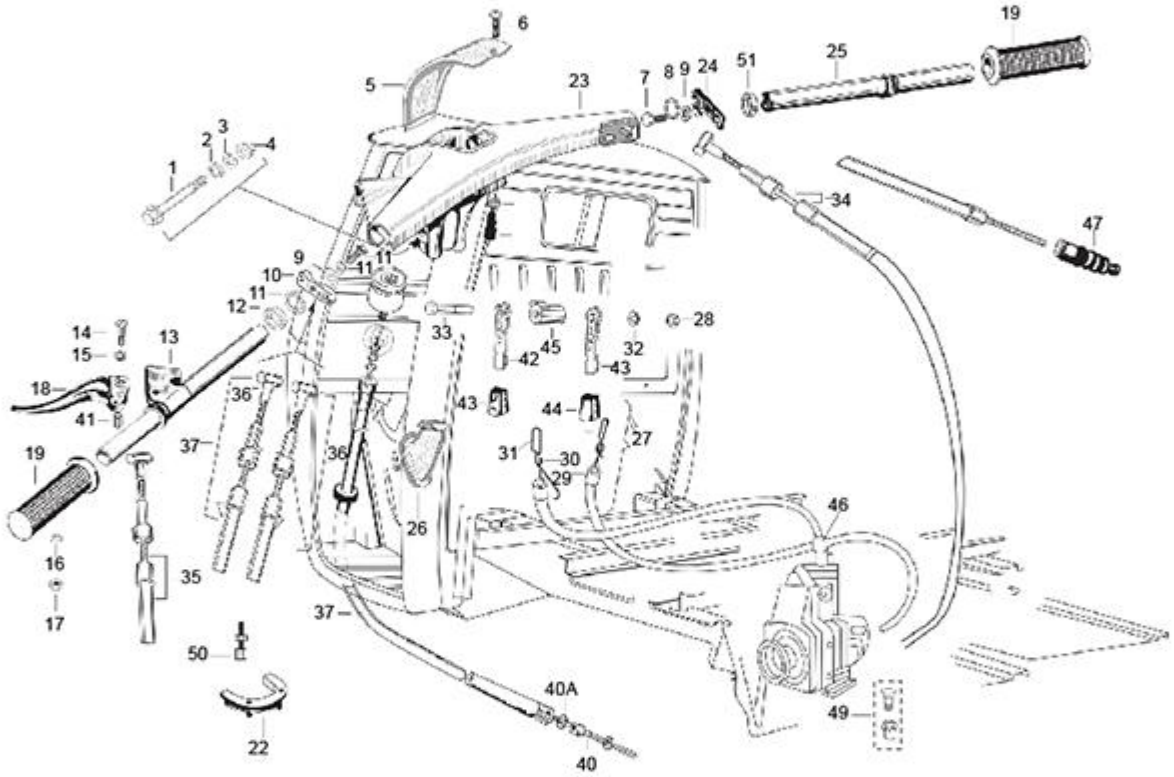

PLATE-31

HANDLE BAR AND CONTROL

Fig. No.	Part No.	Description	Qty	Remarks
1	30103	HANDLE SECURING BOLT M10 X 70 CL 8.8	1	
2	16626	PLAIN WASHER (18X10.5X2)	2	
3	016410	SPRING WASHER	1	
4	20110	HEX NUT M10	1	
5	B041600	HANDLE BAR COVER	1	
5	B041600	HANDLE BAR COVER	1	
6	632158	CSK HEAD SCREW	1	
7	31089	HEX HEAD SCREW M6X18 CL 8.8	2	
8	016406	SPRING WASHER	2	
9	006125	PLAIN WASHER (14X6.4X1.5)	2	
10	109775	GEAR CONTROL LEVER S/A	1	
11	60565	SPRING WASHER	1	
12	109404	WASHER OF RABBET(41737)	1	
13	127451	TUBE WITH TERMINAL S/A	1	
14	15618	SLT PAN HD SCREW	1	
15	16319	BENT SPRING WASHER	1	
16	16620	PLAIN WASHER	1	
17	12138	NYLOCK NUT M6	1	
18	164906	CLUTCH CONTROL LEVER	1	
19	141925	HANDLE	2	
20	197071	ADJUSTER SCREW M6	2	
21	020106	HEXAGONAL NUT	2	
22	126902	PROTECTION COLLAR CABLE	1	
23	B075687ED	HANDLE BAR BODY-ED	1	
24	109635	THROTTLE CONTROL LEVER WITH IP	1	
25	587902	ACCELERATOR TUBE ASSY.	1	
26	109227	PROTECTION GROMMET	1	
27	660349	ENGINE STOP CONTROL TRANSMISSION ASSLY	1	
28	002438	HEX SELF LOCKING NUT	1	
29	660350	ENGINE STOP CONTROL CABLE	1	
30	B001518	D.COMP CNTRL.CABLE ASSLY -XTRA LD (WITH SAFETY ST. SWITCH)	1	
30A	016408	SPRING WASHER	2	
30B	31116	HEX HD. SCREW M8X16	2	
31	604508	DECOMPRESSOR CONTROL CABLE INNER	1	
32	007608	ELASTIC WASHER	1	

PLATE-31

HANDLE BAR AND CONTROL

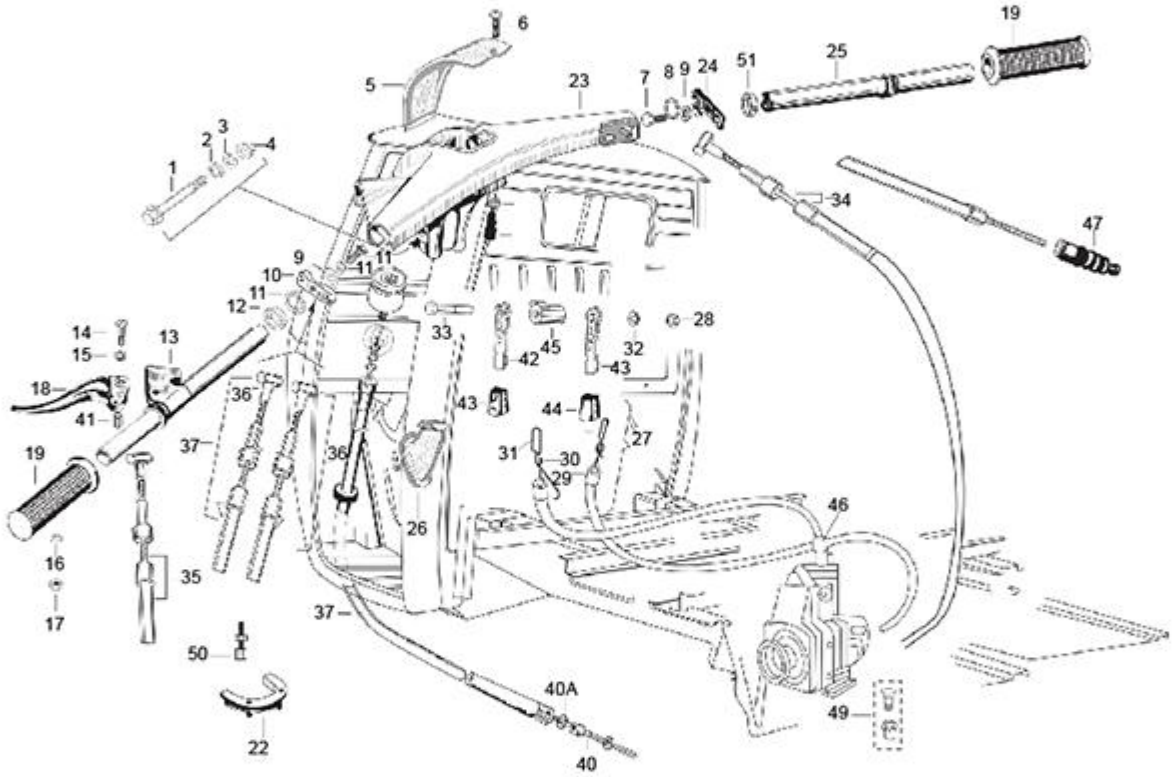

PLATE-31

HANDLE BAR AND CONTROL

Fig. No.	Part No.	Description	Qty	Remarks
33	30077	HEX HEAD SCREW	1	
34	B074184R	GASOLINE CONTROL TRANSMISSION ASSLY.	1	
35	B076808R	CLUTCH CONTROL TRANSMISSION ASSLY. 501 LD	1	
36	B076306	SHIFT CONTROL TRANSMISSION ASSLY NO.1	1	
37	B076307	SHIFT CONTROL TRANSMISSION ASSLY NO.2	1	
38	587803	WIRE GEAR CONTROL WITH TERMINAL	2	
38A	020105	HEXAGONAL NUT	2	
39	660340	FLEXIBLE TRANS. FOR ODOMETER CONTROL	1	
40	659805	FLEXIBLE TRANSMISSION CABLE	1	
40A	97756	METALLIC PLAIN WASHER	4	
41	125181	SPACER	1	
42	119928	LEVER	2	
43	604716	KNOB FOR ENGINE STOP	1	
44	604715	KNOB FOR DECOMPRESSION	1	
45	119181	SPACER	1	
46	119278	TERMINAL	1	
47	118806	PROTECTION BELLOW	2	
48	15478	GROMMET4	2	
49	197071	AD USTER SCREW M6	2	
50	587904	SINTERED WASHER HANDLE BAR (41769)	1	
51	B024379	SCREW TERMINAL ASSLY-ENGINE STOP D.C.	1	

PLATE-32

BRAKE - TANDEM MASTER CYLINDER, BRAKE PIPE AND HAND BRAKES

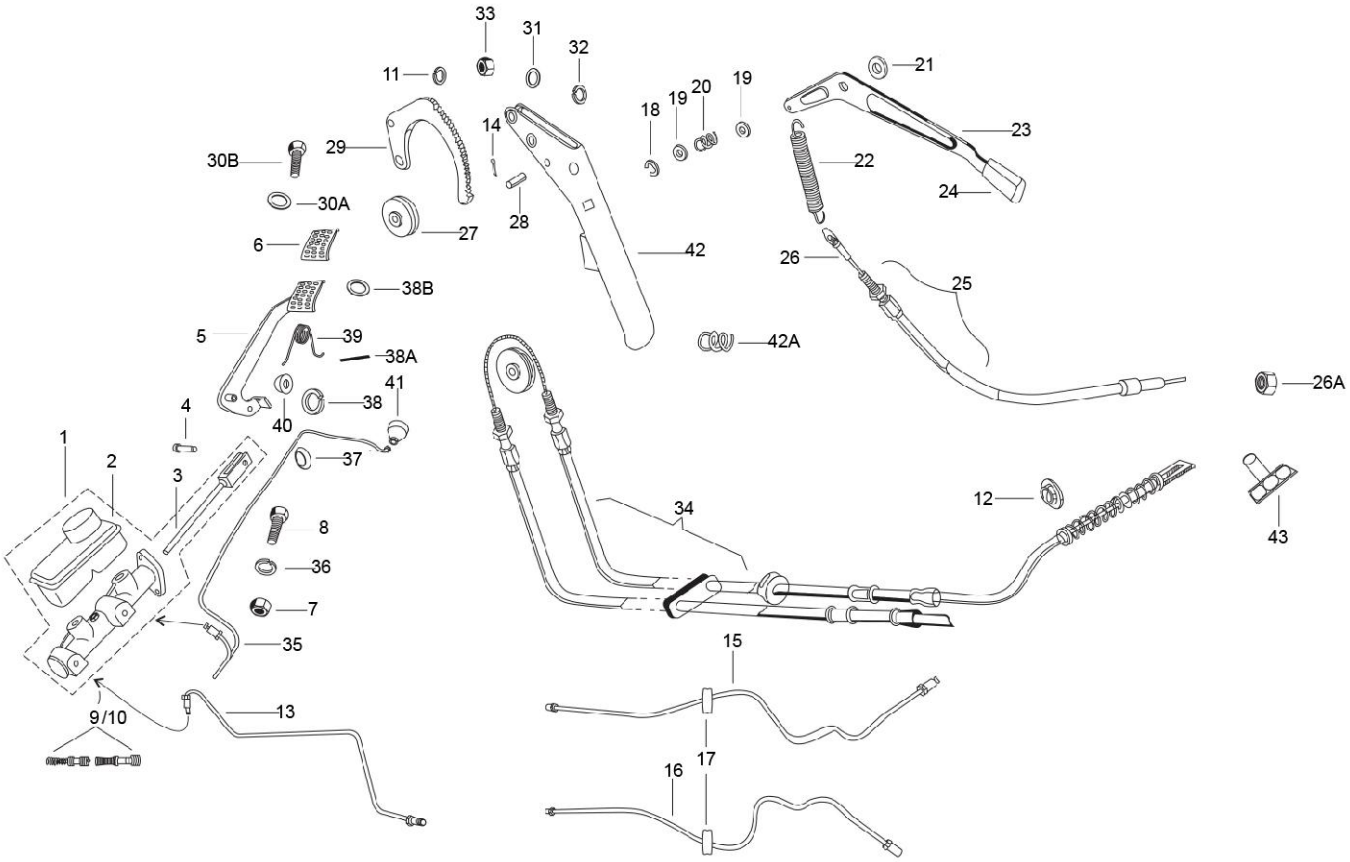

PLATE-32

BRAKE - TANDEM MASTER CYLINDER, BRAKE PIPE AND HAND BRAKES

Fig. No.	Part No.	Description	Qty	Remarks
1	B077154	TMC ASSY.(19.05) WITH TH. RESEVOIR	1	
2	587773	BRAKE OIL TANK	1	
3	587702	PUSH ROD	1	
4	587645	PIN FOR LEVER	1	
5	604760	BRAKE PEDAL WITH FOOT REST ASSLY	1	
6	567461	RUBBER PROTECTION FOR PEDAL	1	
7	020108	HEXAGONAL NUT	2	
8	31122	HEX HD. SCREW M8X30 CL 8.8	2	
8	016408	SPRING WASHER	2	
9	B077155	MA OR KIT TMC	1	
10	B077156	MINOR KIT TMC	1	
11	016408	SPRING WASHER	1	
12	604502	CUP RETAINING SPRING (41733)	2	
13	B076880	BRAKE TUBE FOR REAR WHEELS	1	
14	12761	SPLIT PIN	1	
15	644813	BRAKE PUMP TUBE OF LEFT REAR WHEEL	1	
16	644812	BRAKE PUMP TUBE OF RIGHT REAR WHEEL	1	
17	116971	RUBBER GROMMET	1	
18	005969	CIRCLIP DIA 9 E TYPE	1	
19	006173	METALLIC PLAIN WASHER (808001026)	1	
20	108785	SPRING	1	
21	B042317	SPACER-RC LEVER	1	
22	567690	REVERSE GEAR COUPLING SPRING	1	
23	B076455	LEVER S ASSLY. REVERSE	1	
24	604717	KNOB FOR R.C.	1	
25	660356	REVERSE GEAR TRANS. CABLE	1	
26	660358	CABLE REVERSE GEAR WITH TERMINAL	1	
26A	020105	HEXAGONAL NUT	2	
27	567898	PULLEY FOR HAND BRAKE	1	
28	567899	CLEVIS PIN	1	
29	B042794	RATCHET HAND BRAKE CONTROL	1	
30A	140728	PLAIN WASHER 8.5 X 24 X 3	6	
30B	31118	SCREW M8X20	1	
31	006173	METALLIC PLAIN WASHER (808001026)	1	
31	13812	METALLIC PLAIN WASHER	1	

PLATE-32

BRAKE - TANDEM MASTER CYLINDER, BRAKE PIPE AND HAND BRAKES

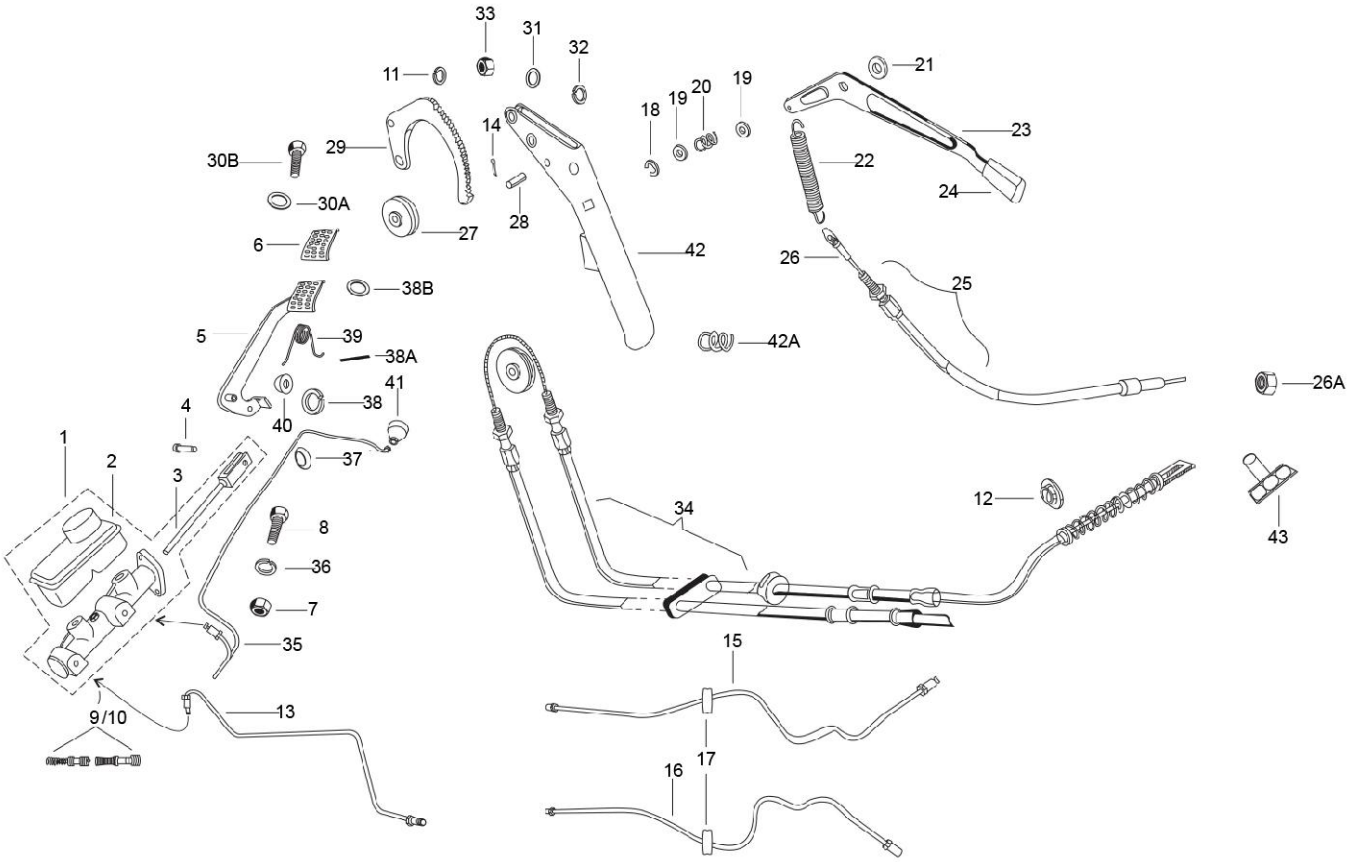

PLATE-32

BRAKE - TANDEM MASTER CYLINDER, BRAKE PIPE AND HAND BRAKES

Fig. No.	Part No.	Description	Qty	Remarks
32	006411	EXT CIRCLIP DIA 11	1	
33	020108	HEXAGONAL NUT	1	
34	660341	PARKING BRAKE TRANS. SUB. ASSY.	1	
35	568161	TUBE BETWEEN TMC & FRT WHEEL	1	
36	016408	SPRING WASHER	2	
37	006414	CIRCLIP DIA. 14 (EXT)	1	
38	843000809	CIRCLIP DIA.8(EXT) TYPE C	1	
38A	567920	SPLIT PIN	1	
38A	568737	SPLIT PIN 4 X 25 (821 0425 2 2)	1	
38B	003058	PLAIN WASHER 15X8.4X1.5	1	
39	587928	FOOT BRAKE PEDAL SPRING	1	
40	229524	WASHER 21X14.3X2	1	
41	138237	CAP	1	
42	567746G1	HAND BRAKE LEVER (WITH POWDER COATING)	1	
43	119278	TERMINAL	1	

PLATE-33

ELECTRICAL DEVICES

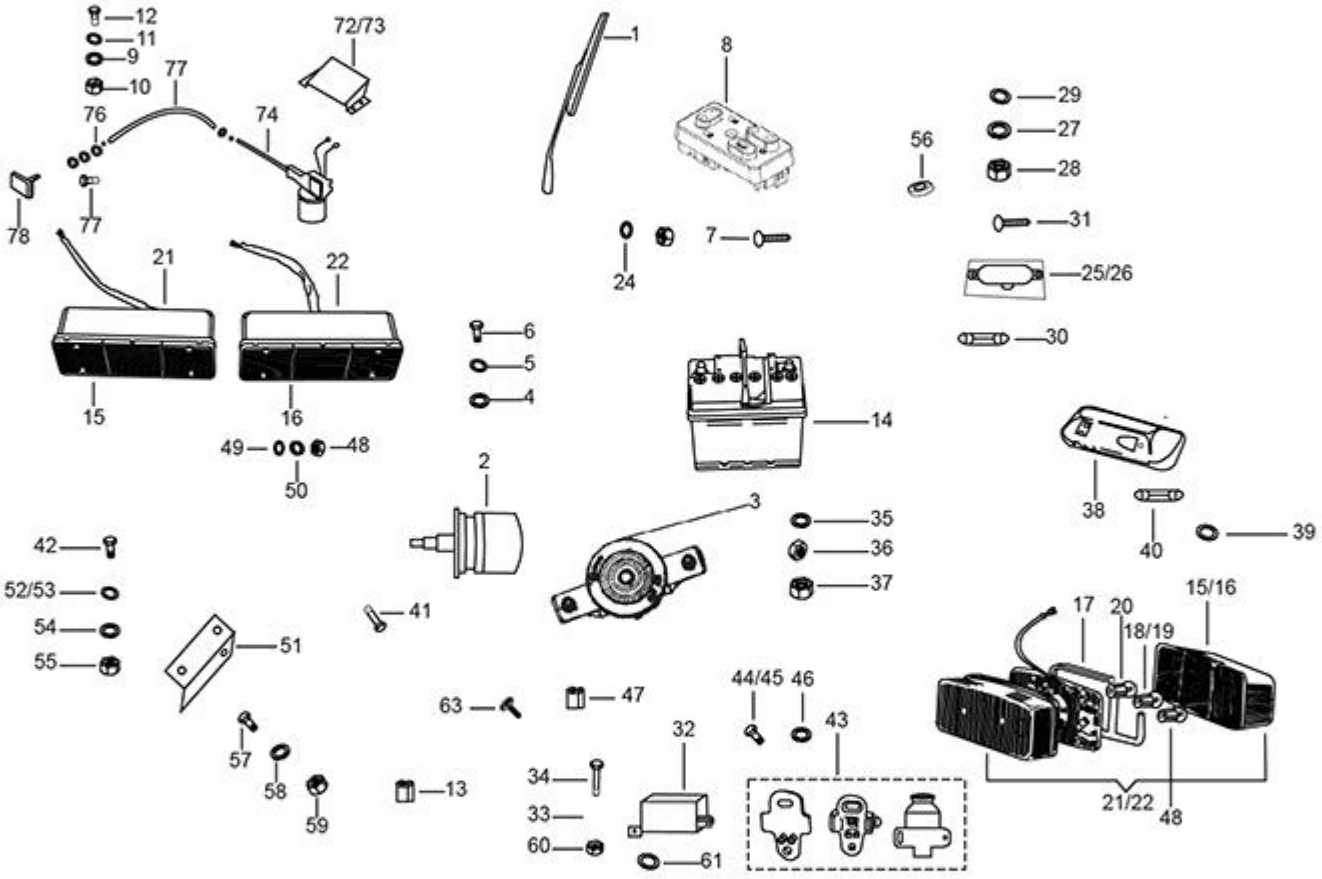

PLATE-33

ELECTRICAL DEVICES

Fig. No.	Part No.	Description	Qty	Remarks
1	B073600	WIPER ARM & BLADE ASSY	1	
2	B073685	WIPER MOTOR ASSY. WITH MTG. BKT.	1	
3	B074033	HORN ASSLY(DIA 70)	1	E - Marked (Export)
4	016408	SPRING WASHER	1	
5	003058	PLAIN WASHER 15X8.4X1.5	1	
6	31116	HEX HD. SCREW M8X16	1	
7	15640	SCREW SECURING SWITCH	1	
8	B073850R	HBS (ST. BUTTON) - CITY UPGRADE (NEW) _ALL NUOVO MODEL	1	FOR PUSH BUTTON_HBS
9	016406	SPRING WASHER	6	
10	020106	HEXAGONAL NUT	6	
11	003056	PLAIN WASHER	6	
12	31088	HEX HD SCREW M6 X 16 CL 8.8 (811061623)	6	
13	604557	FUSE (10A)	6	
14	587650R	BATTERY 12V 35AH	1	
15	920083	TAIL LAMP LENSE LH WITH HARDWARE & GASKET	13	
16	920084	TAIL LAMP LENSE RH WITH HARDWARE & GASKET	1	
17	925603	PACKING	1	
18	181746	INDICATOR BULB 12V 10W	2	
19	925581	INDICATOR LIGHT BULB 12V 21W AMBER COLOUR	2	
20	567700	BULB 10/5W (STOP LIGHT)	2	
21	643704R	TAIL LAMP ASSY. LH	1	E - Marked (Export)
22	643705R	TAIL LAMP ASSY. RH	1	E - Marked (Export)
23	925571	CABLE RACK (033200/PGO)	1	
24	016408	SPRING WASHER	1	
26	B003056	CABIN LAMP (N.I.)	1	NS
27	016406	SPRING WASHER	2	
28	020106	HEXAGONAL NUT	2	
29	003056	PLAIN WASHER	2	
30	71633	STOP AND PARKING BULB 12V 10/5 W	1	
31	015727	SCREW	2	
32	B023727R	CONTACTOR	1	
33	12546	PLAIN WASHER / MULTI TOOTH LOCK WASHER M5	2	
34	31057	HEX HEAD SCREW M5 X 14 CL 8.8	2	
35	003055	RAW WASHER(808000527)	2	
36	020105	HEXAGONAL NUT	2	

PLATE-33

ELECTRICAL DEVICES

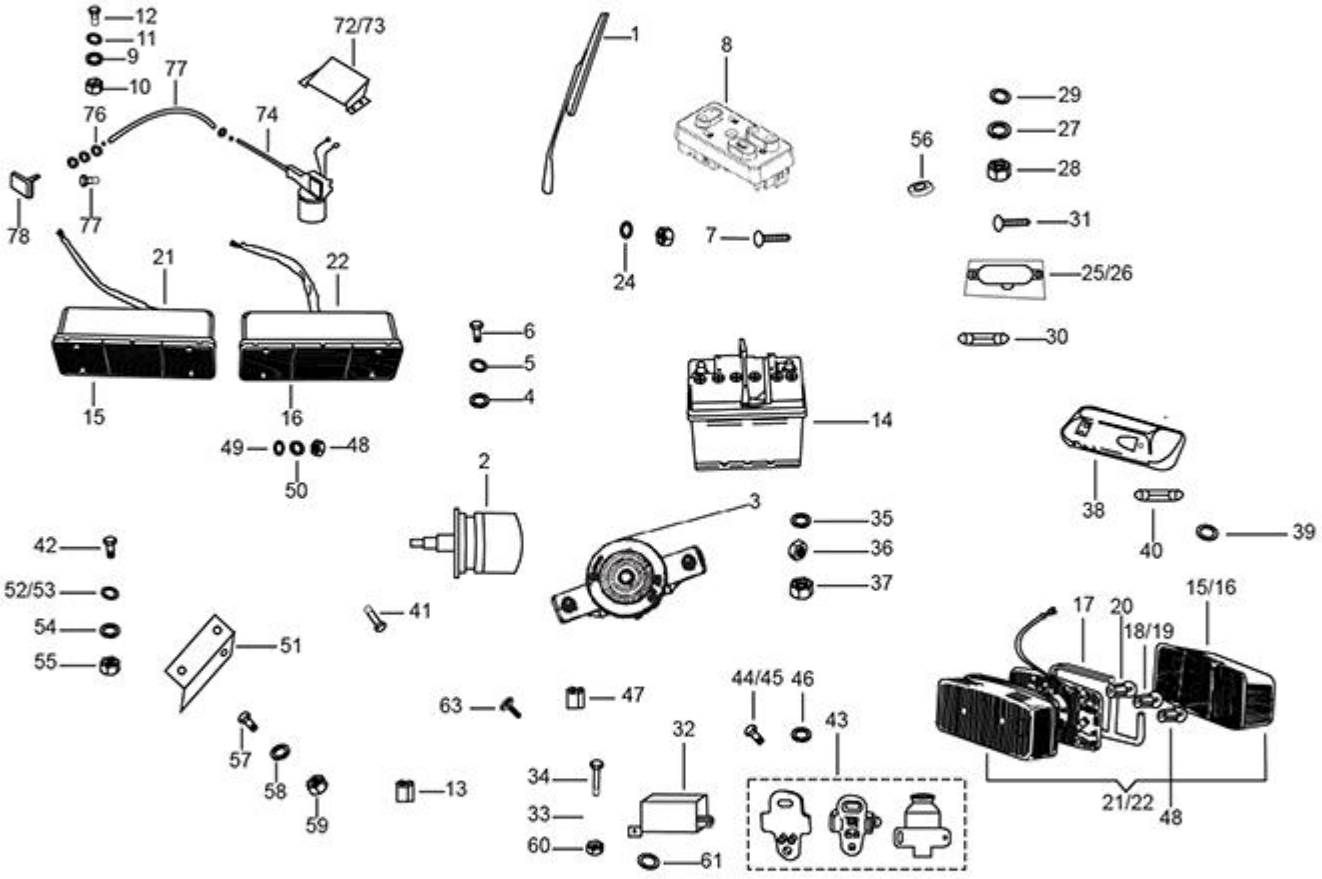

PLATE-33

ELECTRICAL DEVICES

Fig. No.	Part No.	Description	Qty	Remarks
37	020108	HEXAGONAL NUT	1	
38	150915R	REGISTRATION PLATE LAMP ASSY	1	E - Marked (Export)
39	12536	SPRING WASHER	1	
40	71633	STOP AND PARKING BULB 12V 10/5 W	1	
41	008451	PAN SELF TP SCREW 6 SGX13 AB	2	
42	031058	HEXAGONAL HEAD SCREW (M5X16)	2	
43	567498R	BRAKE/REVERSE LIGHT SW (INTEGRAL CAP)-PAV	1	
44	568750	PLAIN RDHD SCREW M4 X 16	2	
45	15996	PHIL RD HD SCREW M4X12	2	
46	003054	PLAIN WASHER	2	
47	567706	FUSE 30 A	1	
48	12136	NUT / NYLOCK NUT M5	2	
49	006078	WASHER	2	
50	16405	SPRING WASHER M5	2	
51	660109	FUSE BOX BKT	1	
52	003055	RAW WASHER(808000527)	4	
53	006078	WASHER	4	
54	006965	BENT SPRING WASHER 5,3X20X0,5	2	
55	020105	HEXAGONAL NUT	2	
56	77055	RING	1	
57	31056	HEX HEAD SCREW M5 X 12 CL. 8.8	2	
58	006965	BENT SPRING WASHER 5,3X20X0,5	2	
59	020105	HEXAGONAL NUT	1	
60	020105	HEXAGONAL NUT	1	
61	003055	RAW WASHER(808000527)	1	
62	15911	PAN SELF TAP SCREW 8SG X 16 AB	1	
63	925567	GEAR PLATE ASSLY (034500/4)	1	
64	569165	DOME NUT	1	
65	569177	STRAP ASSY FOR WIPER MOTOR (N.I.)	1	
66	568714	BATTERY COVER	1	
67	661231	CIRCLIP STEERING LOCK DIA 16 (INT)	1	
68	925584	BULB 12 V 21W CLEAR (PARKING AND INDICATOR)	1	
69	925585	LENS MOUNTING SCREW FOR LATERAL LAMP - NEOLITE MAKE	1	
70	925589	LENSE MOUNTING SCREW (N.I.)	1	
71	569166	WIPER MOTOR MOUNTING BRACKET	1	

PLATE-33

ELECTRICAL DEVICES

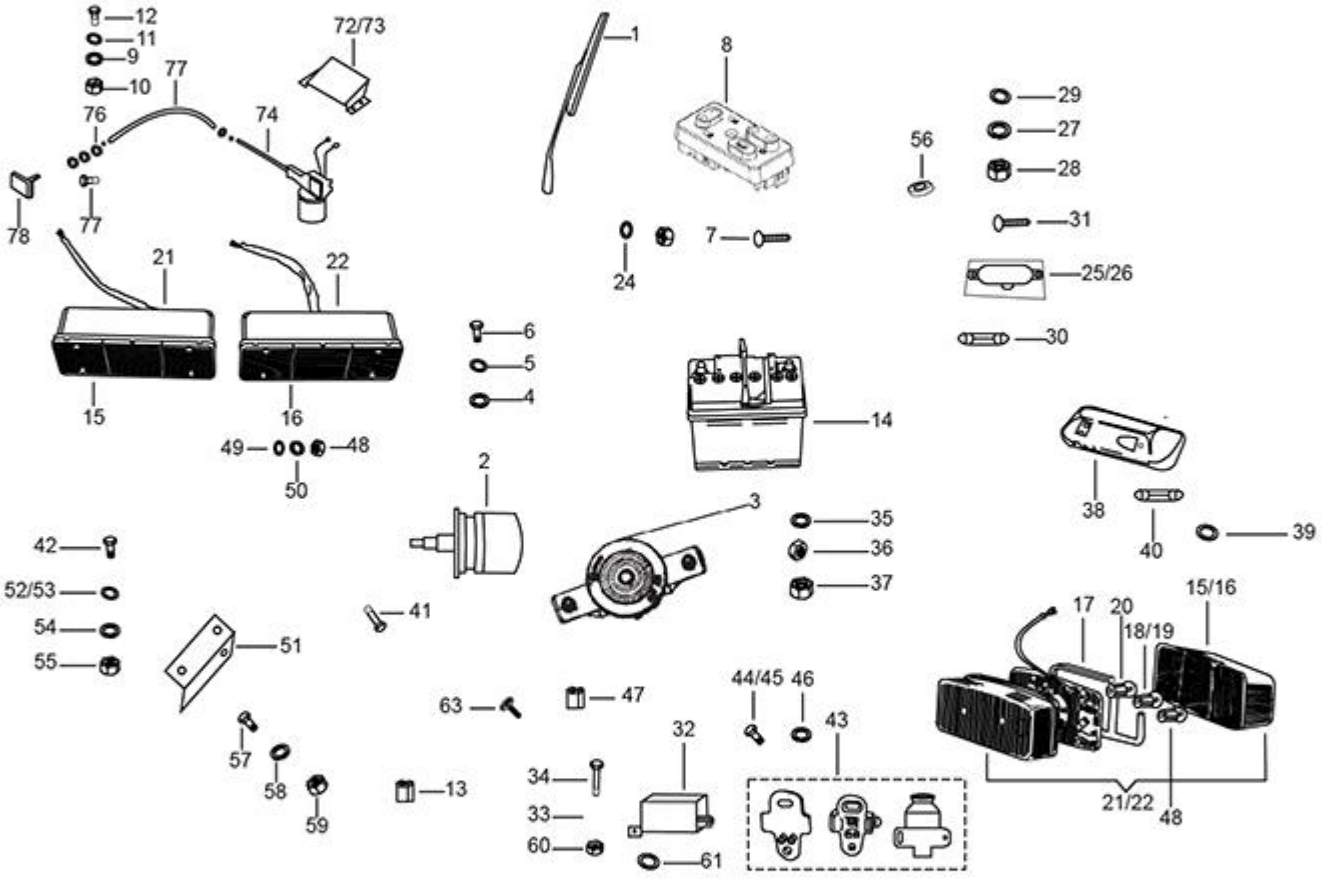

PLATE-33

ELECTRICAL DEVICES

Fig. No.	Part No.	Description	Qty	Remarks
72	632995	WIPER MOTOR ASSY. WITH MTG. BKT. (N.I.)	1	
73	604506	BUNDY TUBE OUTER	1	
74	B076303	BUNDY TUBE (MOTOR TO WHEEL BOX)	1	
75	003054	PLAIN WASHER	1	
76	661925	PHILIP PAN HEAD SCREW (M5 X 0.8 X 1.6)	4	
77	B076304	WHEEL BOX ASSY. (MOD.)	1	
78	B024532	KEY IGNITION SWITCH W/COUPLER (PAVNA)	1	Chassis cut off no.-3XFXD836716
78	B002573	KEY IGNITION SWITCH (PAX 200)	1	Chassis cut off no.-3XFXD836716

PLATE-34

FRONT MUDGAURD AND FRONT FASCIA FOR STD. MODEL

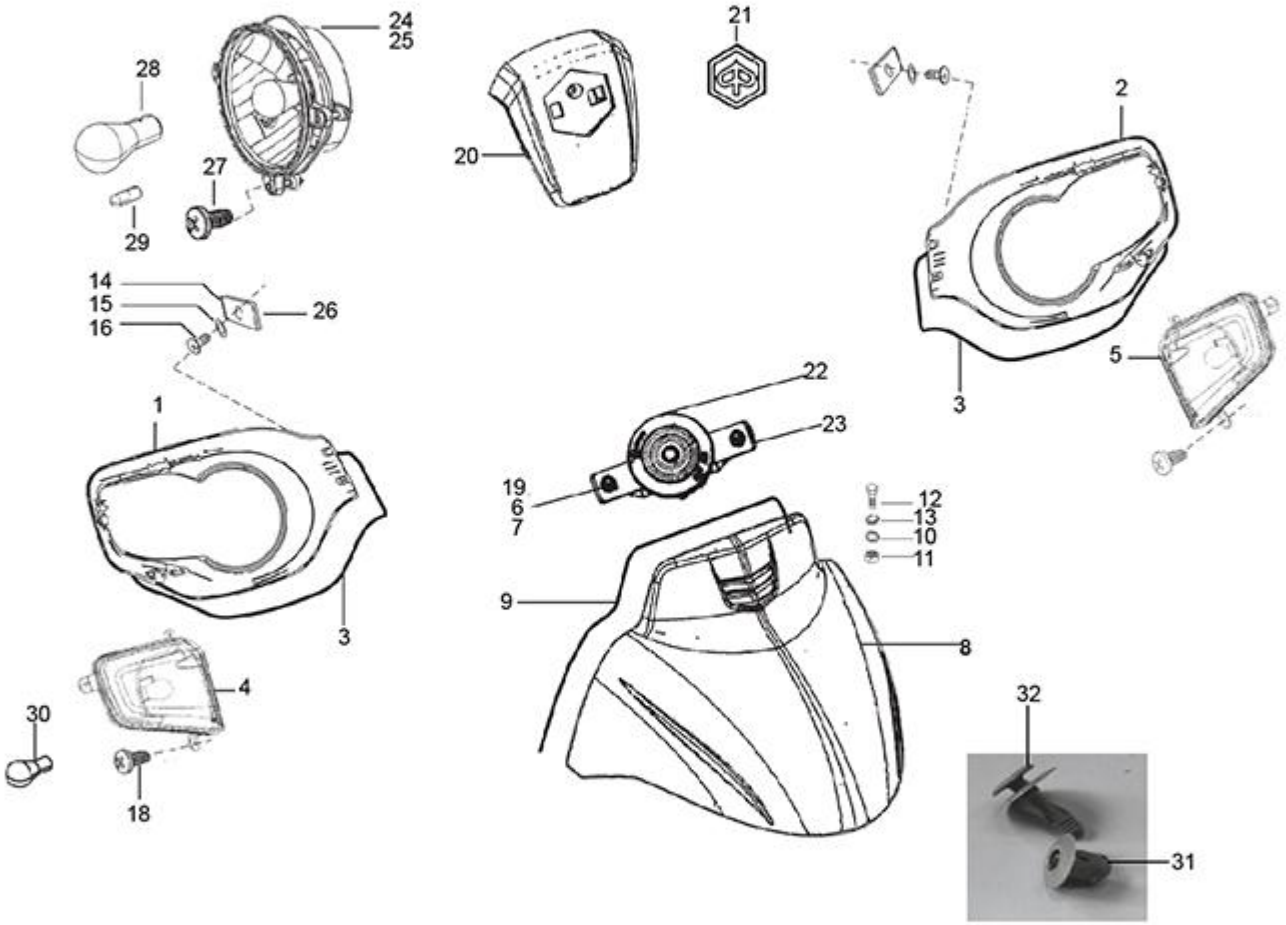

PLATE-34

FRONT MUDGAURD AND FRONT FASCIA FOR STD. MODEL

Fig. No.	Part No.	Description	Qty	Remarks
1	B075999	HEAD LAMP COVER LH	1	E - Marked (Export)
2	B076000	HEAD LAMP COVER RH	1	E - Marked (Export)
3	B076191	HL BEZEL BEADING	2	
4	B074170	SIDE BLINKER S/A LH	1	E - Marked (Export)
5	B074171	SIDE BLINKER S/A RH	1	E - Marked (Export)
6	003056	PLAIN WASHER	4	
7	020106	HEXAGONAL NUT	4	
8	B075974	FRONT MUDGUARD	1	
9	B076801	FRONT MUDGUARD RUBBER BEADING	1	
9	B076802	FRONT MUDGUARD PARTITION RUBBER BEADING	1	
10	013880	PLAIN WASHER	8	
11	020106	HEXAGONAL NUT	4	
12	31089	HEX HEAD SCREW M6X18 CL 8.8	4	
13	078307	SPRING WASHER	4	
14	008080	SPRING PLATE	4	
15	003055	RAW WASHER(808000527)	10	
16	660168	PAN SELF TP. SCREW 10 SGX13AB	5	
17	157716	SCREW ANCHORE	8	
18	B074539	PHILIPS COUNTER HEAD SCREW	4	
19	016406	SPRING WASHER	4	
20	B076001	LOGO SUPPORT_CITY UPGRADE	1	
21	B076120	HEXAGONAL EMBLEM	1	
22	B074033	HORN ASSLY(DIA 70)	1	E - Marked (Export)
23	B073953	HORN MTG. BKT S/A	1	
24	B077866	HEADLAMP ASSY LH	1	E - Marked (Export)
25	B077865	HEADLAMP ASSY RH	1	E - Marked (Export)
26	658810	SPRING FIXING ON RIM HEAD LIGHT	2	
27	015900	TAPPING CUP HEAD SCREW	6	
28	219528	BULB 12V 35/35W	2	
29	567593	BULB 12V 5W / LAMP 4W	2	
30	925581	INDICATOR LIGHT BULB 12V 21W AMBER COLOUR	2	
31	B076606	GROMMET	4	
32	B076605	PIN	4	

PLATE-35

PASSENGER AUTO RICKSHAW BODY

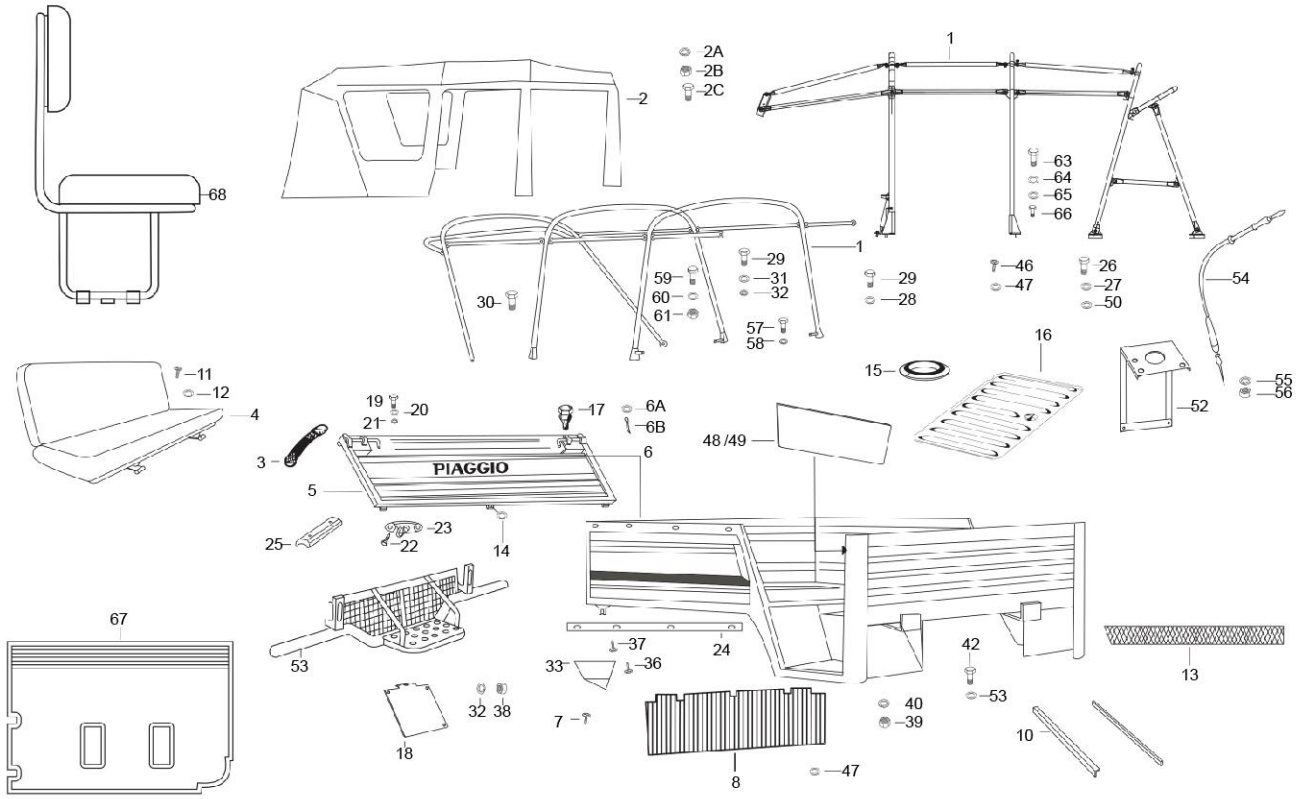

PLATE-35

PASSENGER AUTO RICKSHAW BODY

Fig. No.	Part No.	Description	Qty	Remarks
1	KIT96047R	KIT FOR HOOD FRAME ASSLY AND PROFILE (D+5) AND PROFILE	1	
2	B077742	SOFT TOP ASSLY BLK 501 REG VA/VE (D+5)	1	
2	6B000222	SOFT TOP ASSY. (APE AUTO DXL)	1	
2A	16408	SPRING WASHER M8	8	
2B	20108	HEX NUT M8	4	
2C	31116	HEX HD. SCREW M8X16	4	
3	587907	BELT,PASSENGER SEAT RETAINER	2	
3	B079276	PASSENGER SEAT ASSLY	1	
5	B077526BL	PASSENGER BODY D5S-BL	1	
5	6B000021BL	PASSENGER BODY APE AUTO DXL-BL	1	
5	6B000021BW	PASSENGER BODY APE AUTO DXL-BW	1	
5	6B000021BY	PASSENGER BODY APE AUTO DXL-BY	1	
5	6B000021CB	PASSENGER BODY APE AUTO DXL-CB	1	
5	6B000021EG	PASSENGER BODY APE AUTO DXL-EG	1	
5	6B000021GY	PASSENGER BODY APE AUTO DXL-GY	1	
6	B077526BW	PASSENGER BODY D5S-BW	1	
6	B077526EG	PASSENGER BODY D5S-EG	1	
6	B077526GY	PASSENGER BODY D5S-GY	1	
6A	3057	PL. WASHER 13 X 7 X 1	1	
6B	12761	SPLIT PIN	1	
7	9000	SELF TAP SCREW 4 SG X 13 AB3	6	
8	661493	PASSENGER COMPARTMENT CARPET (UPGRADE)	1	
9	13880	METALIC PLAIN WASHER	4	
10	587962	PROFILE	2	
11	15996	PHIL RD HD SCREW M4X12	8	
12	3054	PLAIN WASHER	16	
13	661262	YELLOW REFLECTIVE TAPE	1	
14	12138	NYLOCK NUT M6	4	
15	B024501	PLASTIC COVER PLUG-CARGO	1	
16	B001186ED	ENGINE INSPECTION DOOR 3W BSIII - CED	1	
17	567732	BUFFER	2	
18	643661	LICENSE PLATE MTG. BKT.	1	
19	31119	HEX HD SCREW M8 X 25	2	
20	3058	PLAIN WASHER 15X8.4X1.5	2	
21	16408	SPRING WASHER M8	2	

PLATE-35

PASSENGER AUTO RICKSHAW BODY

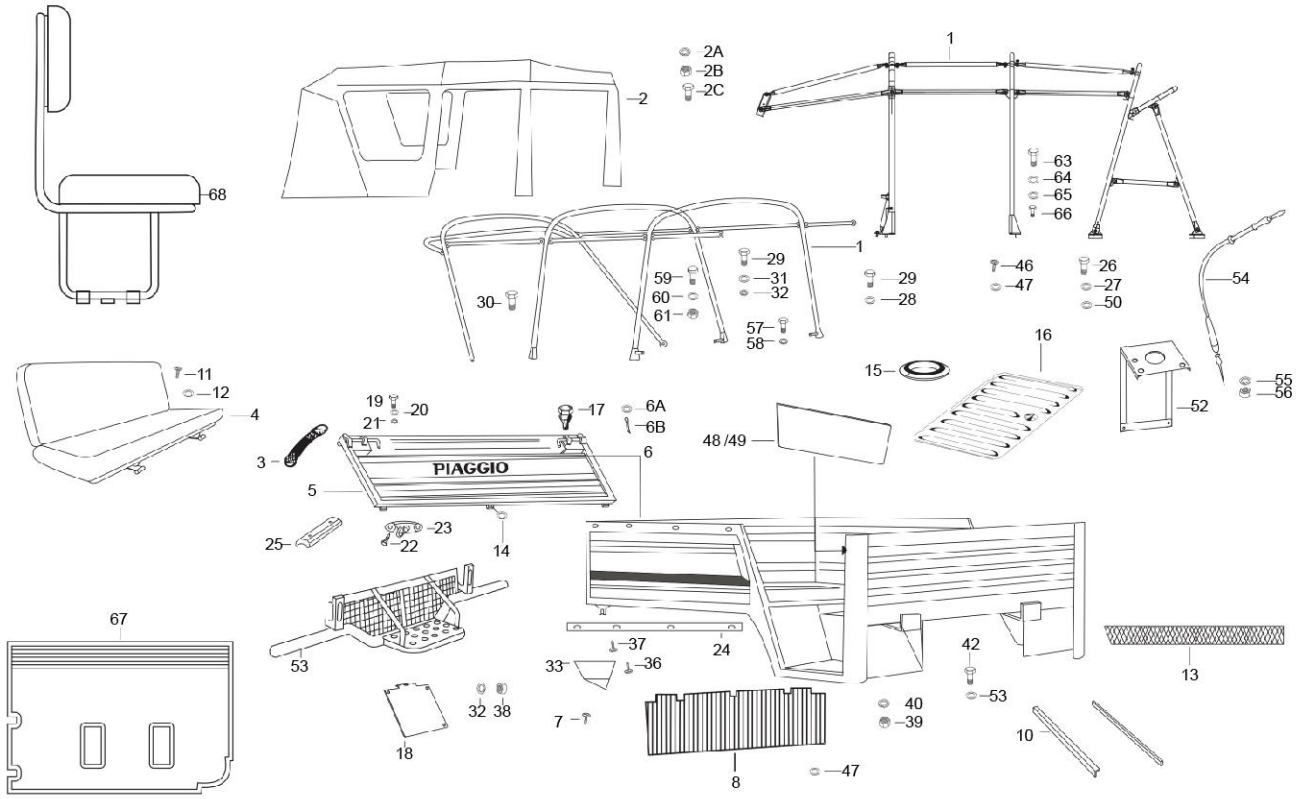

PLATE-35

PASSENGER AUTO RICKSHAW BODY

Fig. No.	Part No.	Description	Qty	Remarks
22	8432	SCREW	14	
23	587948	BKT. FOR HANDLE (N.I.)	7	
24	643752	LATERAL PROFILE FOR COVER	1	
25	568275	RUBBER STOP	4	
26	31118	SCREW M8X20	4	
27	3058	PLAIN WASHER 15X8.4X1.5	4	
28	16408	SPRING WASHER M8	4	
29	31088	HEX HD SCREW M6 X 16 CL 8.8 (811061623)	14	
30	31090	HEX SCREW	2	
31	3056	PLAIN WASHER	32	
32	16406	SPRING WASHER	18	
33	B073274	REAR PANEL RH (PLASTIC)	1	
34	20106	HEX NUT M6	1	
35	B073275	REAR PANEL LH (PLASTIC)	1	
36	15911	PAN SELF TAP SCREW 8SG X 16 AB	12	
37	14628	CSK SELF TP.SCREW 6SG X 16 AB	28	
38	20106	HEX NUT M6	2	
39	20104	HEX NUT M4	8	
40	16404	SPRING WASHER M4	8	
41	643502	LOCK SET WITH KEYS (PASS) (COMMON KEY)	1	
41	6G000028	LOCK SET (NEW)_PASS.NUOVO	1	
42	15900	HEAD LAMP SECURING SCREW/PAN SELF TAP SCREW	8	
43	3056	PLAIN WASHER	4	
44	31092	HEX. HD SCREW M6X25	4	
45	20108	HEX NUT M8	2	
46	15911	PAN SELF TAP SCREW 8SG X 16 AB	8	
47	16670	PLAIN WASHER 12X4.5X1	8	
48	567534	RIGHT FABRIC PROTECTION	1	
49	567535	LEFT FABRIC PROTECTION	1	
50	16670	PLAIN WASHER 12X4.5X1	8	
51	B009701	PASS. SPACE REAR CARPET (V.E)	1	
52	568325	SUPPORT PLATE S/A FAREMETER	1	
53	B077597	REAR VISUAL BARRIER ASSLY (VE)	1	
54	568107	FAREMETER CABLE ASSY (N.I.)	1	
55	16408	SPRING WASHER M8	2	

PLATE-35

PASSENGER AUTO RICKSHAW BODY

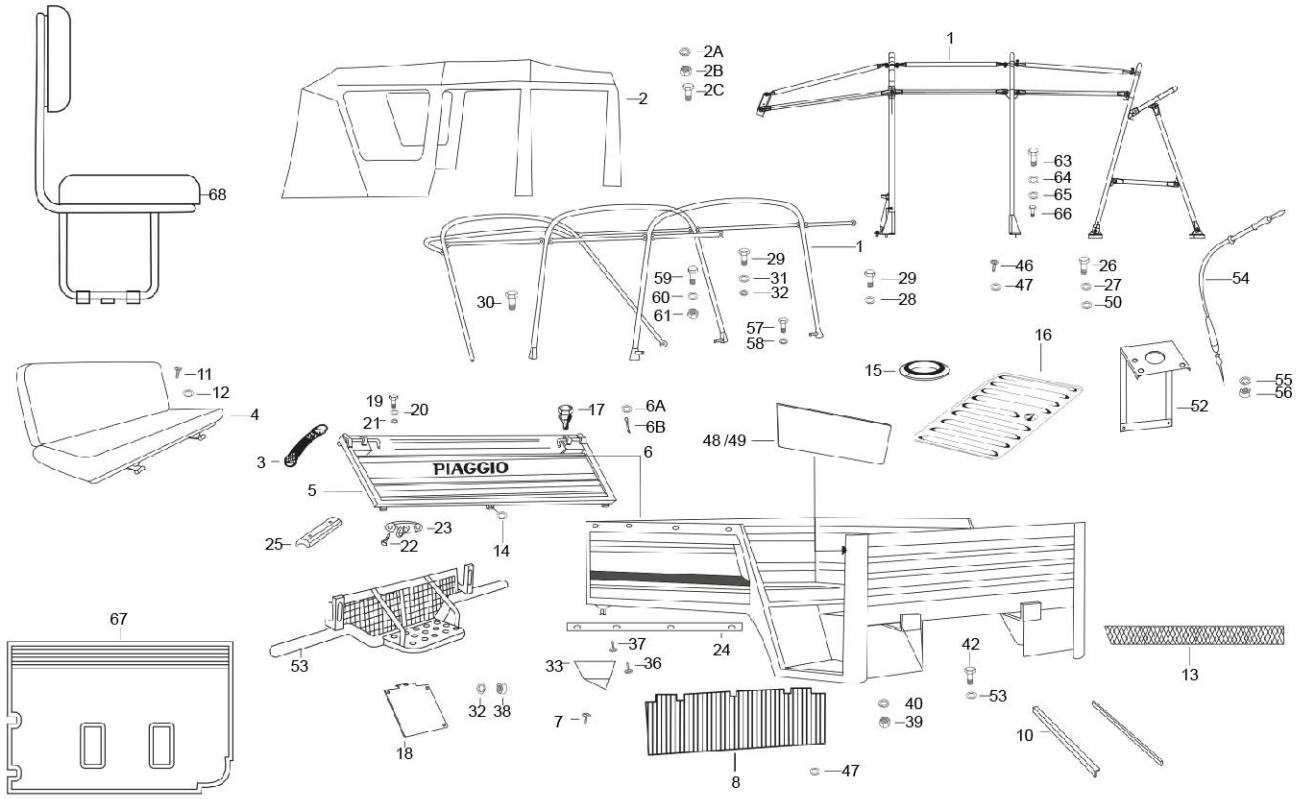

PLATE-35

PASSENGER AUTO RICKSHAW BODY

Fig. No.	Part No.	Description	Qty	Remarks
56	20108	HEX NUT M8	4	
57	30074	HEX HEAD BOLT M8 X 40 CL 8.8	2	
58	16408	SPRING WASHER M8	2	
59	31116	HEX HD. SCREW M8X16	2	
60	16408	SPRING WASHER M8	2	
61	20108	HEX NUT M8	2	
62	30074	HEX HEAD BOLT M8 X 40 CL 8.8	2	
63	14628	CSK SELF TP.SCREW 6SG X 16 AB	28	
64	3058	PLAIN WASHER 15X8.4X1.5	2	
65	568135	WASHER(NI PLATED)	10	
66	8432	SCREW	49	
67	B077736	PASS.- REAR CARPET (D+5)	1	
68	B077559	REAR PASS SEAT ASSLY	2	
69	B078925	PIAGGIO STICKER (VISUAL BARRIER	1	
70	6B000131	STICKER APE AUTO DXL	1	
71	6B000132	STICKER AUTO DXL (SIDE PANEL)	1	

PLATE-36

CABLE HARNESS

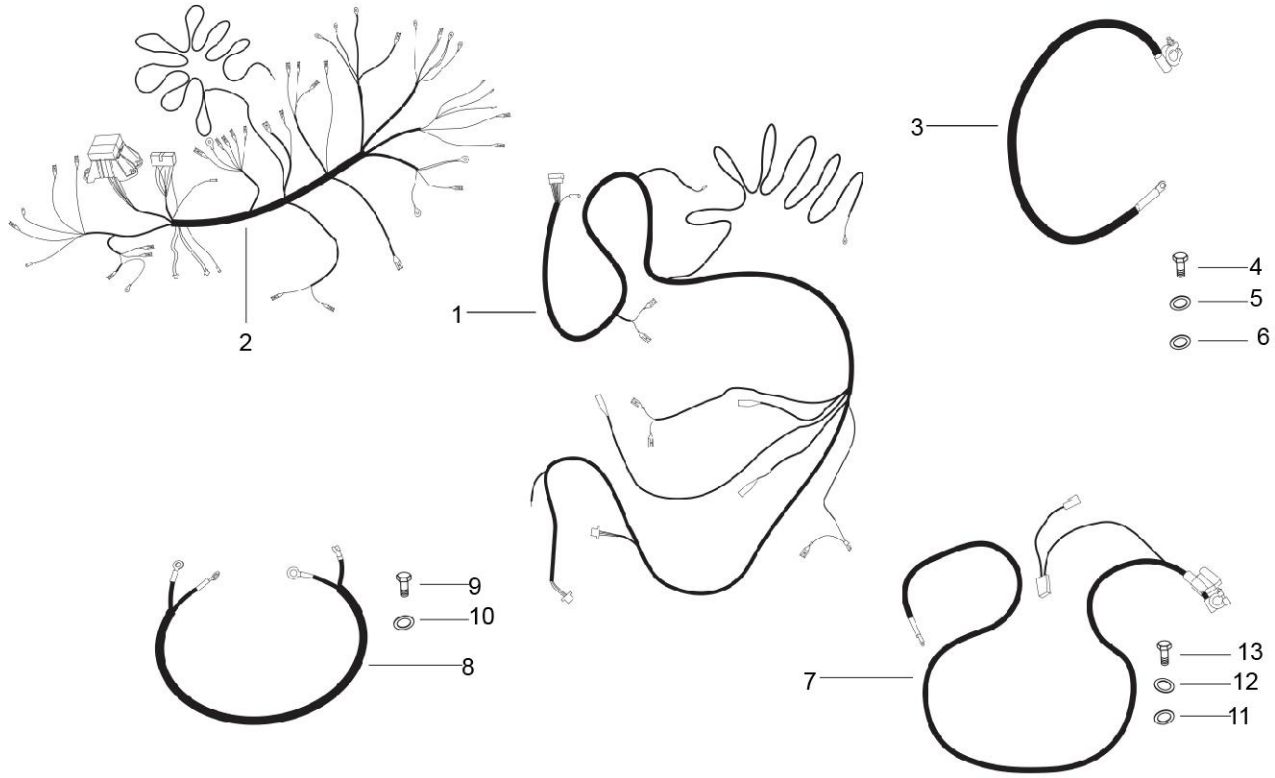

PLATE-36

CABLE HARNESS

Fig. No.	Part No.	Description	Qty	Remarks
1	6D000210	WHSMAIN PASS.D+5 BSIV	1	FOR PUSH BUTTON_HBS
2	B079401	W/HS_INST. PANEL_501_BS-IV(STD)- (VISON	1	FOR PUSH BUTTON_HBS
3	644838R	BATTERY CABLE -VE	1	
4	31088	HEX HD SCREW M6 X 16 CL 8.8 (811061623)	1	
5	003056	PLAIN WASHER	1	
6	016406	SPRING WASHER	1	
7	659791R	BATTERY CABLE POSITIVE (+) APE DELUX	1	
8	567484	STARTER CABLE GROUP	1	
9	31116	HEX HD. SCREW M8X16	1	
10	003058	PLAIN WASHER 15X8.4X1.5	1	
11	016406	SPRING WASHER	1	
12	003056	PLAIN WASHER	1	
13	31088	HEX HD SCREW M6 X 16 CL 8.8 (811061623)	1	
14	B075178R	PIG TAIL CABIN LAMP (PASS UPGRADE)(N.I.)	1	

PLATE-37

FRONT BRAKE ASSEMBLY SELF ADJUSTING (DIA 180X40 MM)

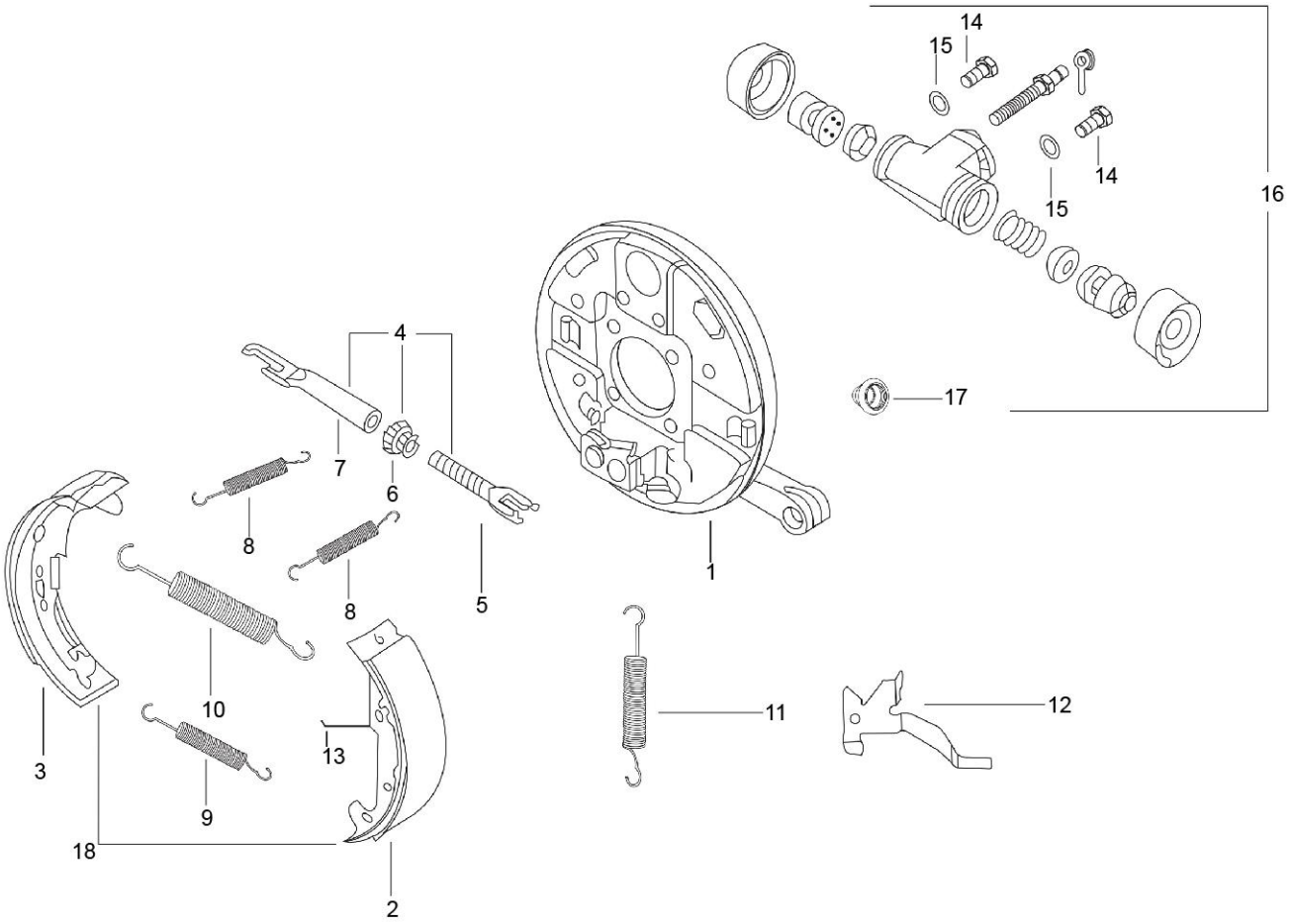

PLATE-37

FRONT BRAKE ASSEMBLY SELF ADJUSTING (DIA 180X40 MM)

Fig. No.	Part No.	Description	Qty	Remarks
1	616541	BRACKET WHEEL CARRIER WITH PI	1	
2	B003784	LEADING SHOE COMP WITH PIN LH ANL 1643	1	
3	652356	TRAILING SHOE COMPLETE	1	
4	179056	FORK ASSY LH	1	
5	178804	FORK FOR LH WHEEL	1	
6	178805	LH - GEAR	1	
7	178806	LH STRUT	1	
8	602497	JAWS STOP SPRINGS	2	
9	116088	SPRING SUPPORTING JAWS	1	
10	245038	SHOE RETURN SPRING	1	
11	178808	SPRING LEVER RETURN	1	
12	178807	LEVER LH	1	
13	178823	JUMPER LH	1	
13	178824	JUMPER	1	
14	63440	BOLT M6X12	2	
15	12536	SPRING WASHER	2	
16	587616	BRAKE CYLINDER FR ASSLY (DIA. 22.225)	1	
17	925501	CAP (KBX P 6450225)	1	
18	940004	FRONT BRAKE SHOE KIT COMPRISING OF 2 & 3	1	
19	925521	MINOR KIT WHEEL CYL. FRT (KBX 1007) NI	1	

PLATE-38

REAR BRAKE ASSEMBLY SELF ADJUSTING (DIA 180X40 MM)

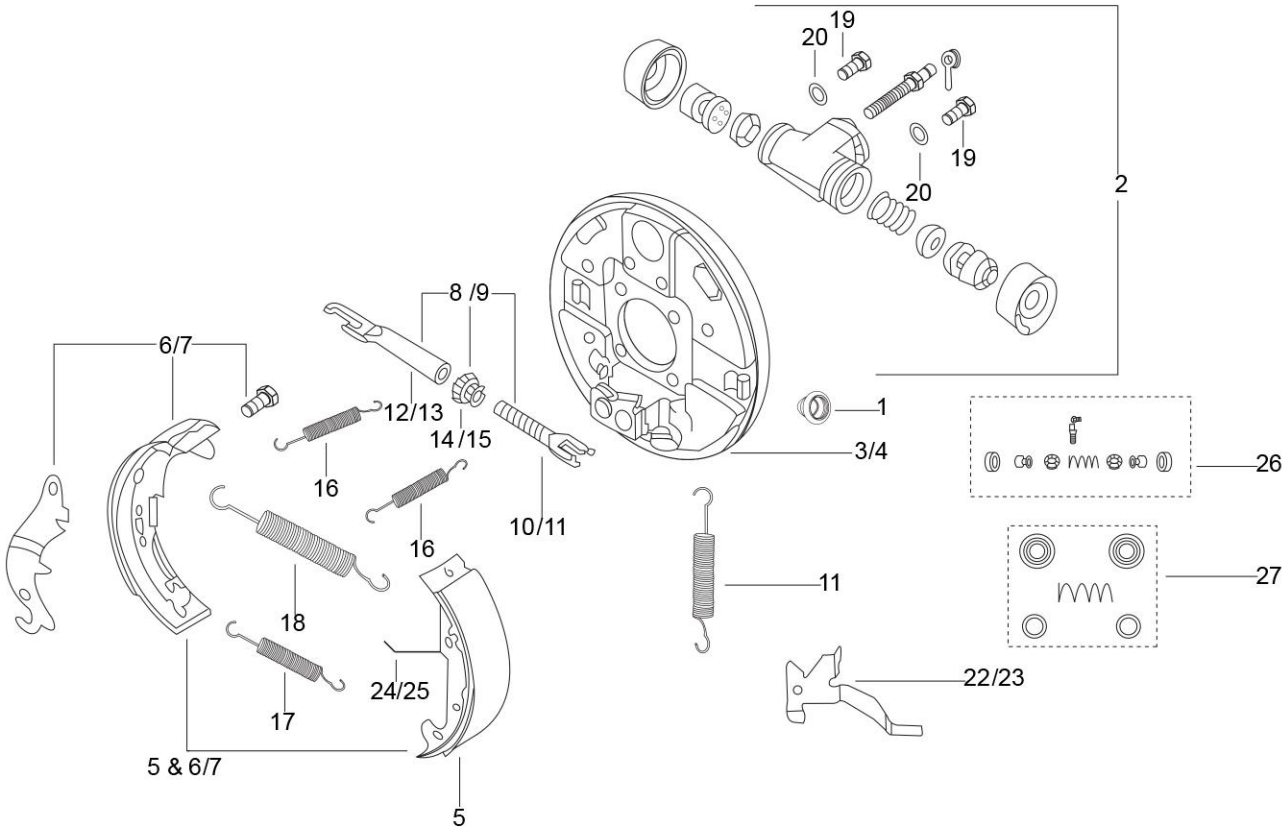

PLATE-38

REAR BRAKE ASSEMBLY SELF ADJUSTING (DIA 180X40 MM)

Fig. No.	Part No.	Description	Qty	Remarks
1	925501	CAP (KBX P 6450225)	1	
2	632148	WHEEL CYLINDER ASSY. FRONT DIA. (25.4 MM)	1	
2	632148	WHEEL CYLINDER ASSY. FRONT DIA. (25.4 MM)	1	
3	602120	LEFT BRAKE JAW HOLDING CABLE PLATE	1	
4	602123	RIGHT BRAKE JAW HOLDING CABLE PLATE	1	
5	B003784	LEADING SHOE COMP WITH PIN LH ANL 1643	1	
6	652360	TRAILING SHOE WITH HBL LH	1	
7	652361	TRAILING SHOE WITH HBL RH	1	
8	179056	FORK ASSY LH	1	
9	179057	FORK ASSY. RH	1	
10	178804	FORK FOR LH WHEEL	1	
11	178818	RH FORK	1	
12	178806	LH STRUT	1	
13	178820	RH STRUT	1	
14	178805	LH - GEAR	1	
15	178819	RH GEAR	1	
16	602497	JAWS STOP SPRINGS	2	
17	116088	SPRING SUPPORTING JAWS	1	
18	245038	SHOE RETURN SPRING	1	
19	63440	BOLT M6X12	2	
20	12536	SPRING WASHER	2	
21	178808	SPRING LEVER RETURN	1	
22	178807	LEVER LH	1	
23	178821	LEVER RH	1	
24	178823	JUMPER LH	1	
25	178824	JUMPER	1	
26	925573	MAJOR KIT	1	
27	925574	MINOR KIT WHL CYL. RR	1	
28	940005	REAR BRAKE SHOE SET L/H COMPRISING OF 5 & 7	1	
29	940006	REAR BRAKE SHOE SET R/H. COMPRISING OF 5 & 8	1	

PLATE-39
SET PART

IMAGE NOT AVAILABLE

PLATE-39

SET PART

Fig. No.	Part No.	Description	Qty	Remarks
1	E18A060006	VALVE GUIDE SET	1	
1	E43512266	VALVE GUIDE - INLET - FINISH	2	
2	E52005171	SET OF CAM FOLLOWER LEVERS	2	
2	E5005271054	CAM FOLLOWER LEVER	1	
3	E10A060009	ROCKER LEVER SET	1	
3	E43502768	ROCKER LEVER INLET	1	
3	E10A060001	ROCKER LEVER EXHAUST ASSLY	1	
4	E43522238	SET OF VALVE CONSISTING OF SR. NO. 12 & 13	1	
4	E43518363	INLET VALVE	1	
4	ED33454	EXHAUST VALVE	1	
5	E40002291	SET OF MAIN BEARING BUSH (STD)	1	
5	E40002263	BUSH CRANKCASE STD	1	
5	E53002206	BUSH,FWE STD.	1	
6	E40002292	SET OF MAIN BEARING BUSH (0.25 MM U/S)	1	
6	E40002264	BUSH CRANKCASE 0.25 MM U/S	1	
6	E53002207	BUSH FWE SIDE 0.25 MM U/S	1	
7	E40002293	SET OF MAIN BEARING BUSH (0.5 MM U/S)	1	
7	E40002265	BUSH CRANKCASE 0.50 MM U/S	1	
7	E53002208	BUSH FWE SIDE 0.50 MM U/S	1	
8	E40002294	SET OF MAIN BEARING BUSH (0.75 MM U/S)	1	
8	E40002266	BUSH CRANKCASE 0.75 MM U/S	1	
8	E53002209	BUSH FWE SIDE 0.75 MM U/S	1	
9	E40002295	SET OF MAIN BEARING BUSH (1MM U/S)	1	
9	E40002267	BUSH CRANKCASE 1.00 MM U/S	1	
9	E53002210	BUSH FWE SIDE 1.00 MM U/S	1	
10	E43507359	SET OF PUSHRODS	2	
10	E43507331	PUSH ROD 500 SR.	2	
11	E43526174	SLEEVE SET CONSISTING OF 4 & 5	1	
11	E40006428	JOINT PUSH ROD SLEEVE (G400AG)	1	
12	E43511440	PISTON RING SET (STD)	1	
12	E43520559	COMPRESSION RING TOP	1	
12	E43502766	TAPER FACED RING-2ND RING TYPE	1	
12	E43502767	COIL SPRING LOADED BEVEL - EDGED OIL RING TYP.	1	
13	E10A050005	PISTON ASSY.GRADE A	1	
13	E10G050005	FINISHED PISTON	1	

PLATE-39
SET PART

IMAGE NOT AVAILABLE

PLATE-39

SET PART

Fig. No.	Part No.	Description	Qty	Remarks
13	E43511440	PISTON RING SET (STD)	1	
13	E5408480091	GUDGEON PIN	1	
13	E3124017	CIRCLIP 500 SR	2	
14	E10A050006	PISTON ASSY.GRADE B	1	
14	E10G050006	FINISHED PISTON	1	
14	E43511440	PISTON RING SET (STD)	1	
14	E5408480091	GUDGEON PIN	1	
14	E3124017	CIRCLIP 500 SR	2	
15	E10A050007	CYLINDER & PISTON ASSY. KIT	1	
15	E10M030002	CYLINDER GRADE A	1	
15	E10A050005	PISTON ASSY.GRADE A	1	
15	E10M030003	CYLINDER GRADE B	1	
15	E10A050006	PISTON ASSY.GRADE B	1	
16	E87022230	COLLET & RATAINER ASSEMBLY SET	1	
16	E500640030	SPRING RETAINER TOP	1	
16	E870022109	VALVE COLLETS (MULTY GROOVE)	2	
17	NS	NOT SERVICEABLE	1	
18	E43522257	BREATHER KIT (ED43751)	1	
18	E1969695019	DIAPPHRAM	1	
18	E1967980064	CUP FOR FILTER	1	
18	E1965140021	SHEET STEEL	1	
18	E51981002	SCREW	5	
18	E1965755128	SPRING LM TYPE	1	
18	ED43751	SAFETY VALVE	1	
19	E43525547	LIQUID SEALANT 5060 (LOCTITE) (TUBE-20 GM)	1	
20	E43525548	LIQUID SEALANT 518 (LOCTITE) (TUBE-20 GM)	1	

PLATE-24.A

ALUMINIUM CLUTCH ASSEMBLY

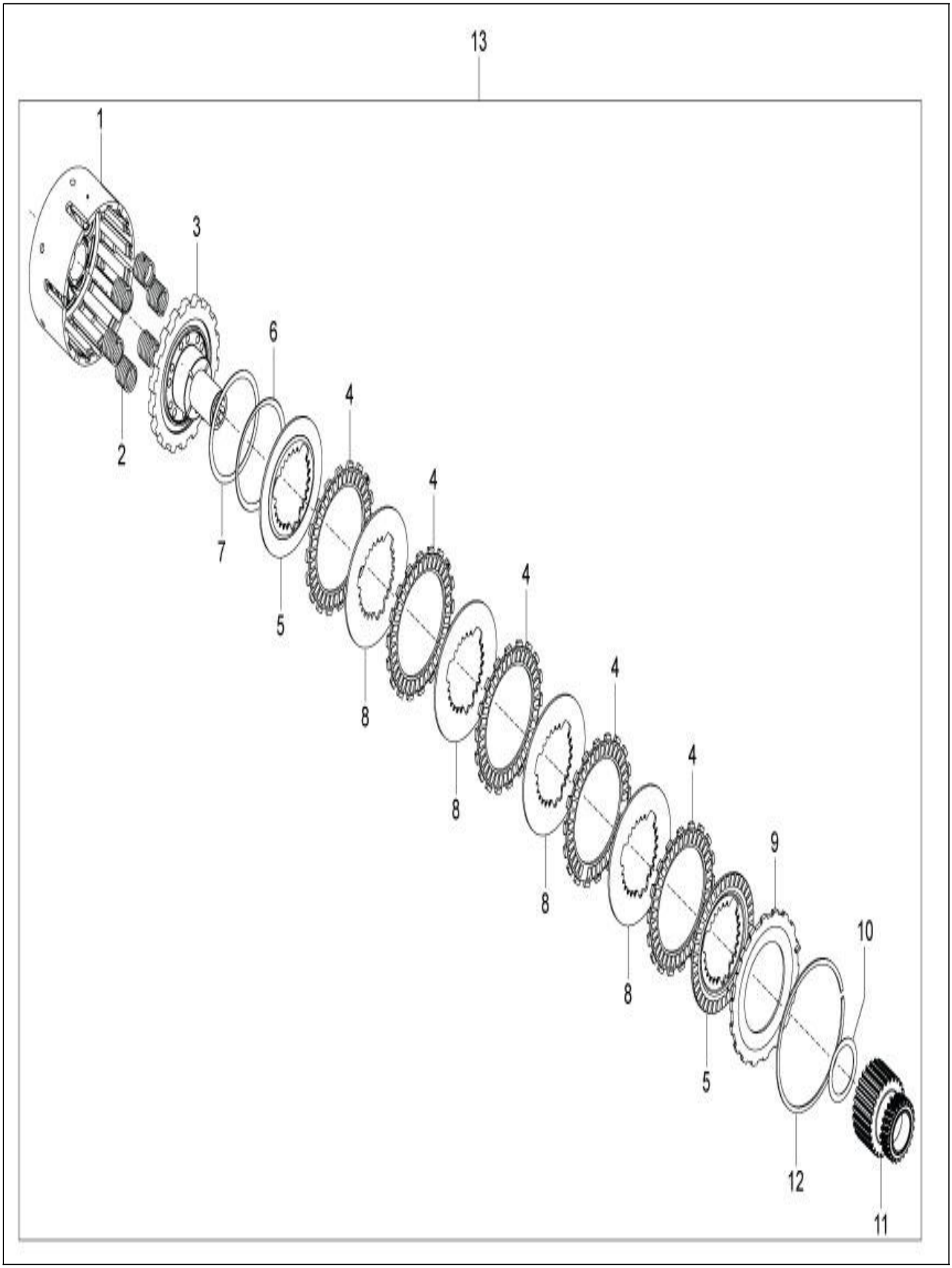

PLATE-24.A

ALUMINIUM CLUTCH ASSEMBLY

Fig. No.	Part No.	Description	Qty	Remarks
1	1A017153	CLUTCH HOUSING	1	
2	1A017147	CLUTCH SPRING	6	
3	1A017154	PLATE HUB	1	
4	1A017155	DRIVER PLATE	5	
5	1A017156	DRIVEN PLATE	2	
6	1A017157	DAMPER SPRING	1	
7	1A017158	DAMPER SPRING RETAINER	1	
8	1A017159	DRIVEN PLATE	4	
9	1A017160	CLUTCH LOCK PLATE	1	
10	1A017161	SHIM WASHER	1	
11	1A017162	ENGINE GEAR WITH BUSH	1	
12	1A017163	RETAINING RING	1	
13	1A015065	COMPLETE CLUTCH ASSY	1	

PLATE-24.B

CLUTCH & COVER ASSEMBLY (FOR ALUMINIUM CLUTCH)

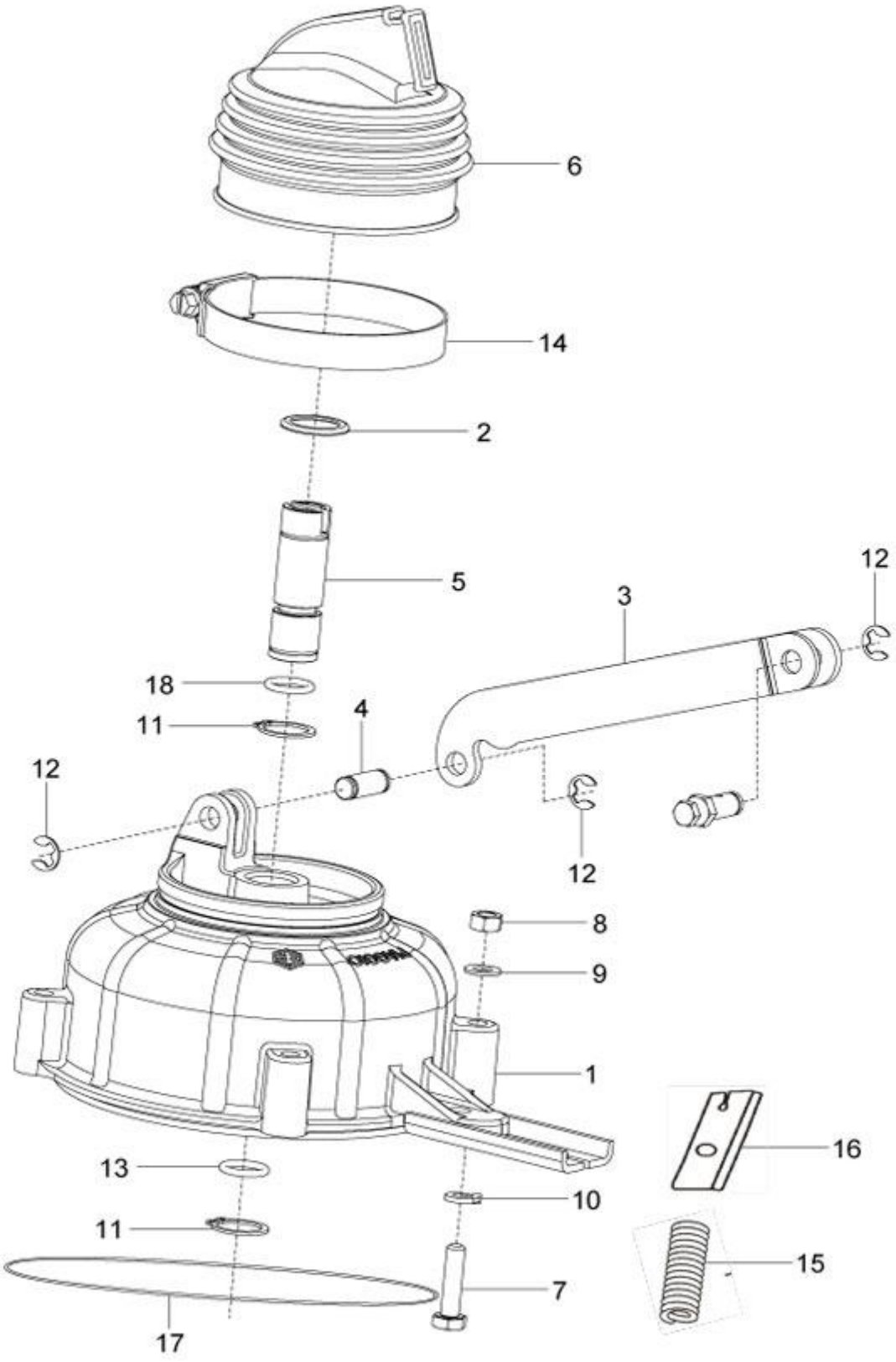

PLATE-24.B

CLUTCH & COVER ASSEMBLY (FOR ALUMINIUM CLUTCH)

Fig. No.	Part No.	Description	Qty	Remarks
1	1A014760	CLUTCH COVER ASSY	1	
1	1F000830	CLUTCH COVER	1	
2	120164019	RETAINING PLATE	1	
3	127460010	LINK ASSLY - CLUTCH (IMPROVED)	1	
4	127013013	PIN CLUTCH	1	
5	1A014753	PLUNGER SHAFT	1	
6	127012019	BELLOW CLUTCH ACTUATING	1	
7	31092	HEX. HD SCREW M6X25	1	
8	20106	HEX NUT M6	1	
9	3056	PLAIN WASHER	1	
10	16406	SPRING WASHER	1	
11	842001600	CIRCLIP DIA.16(EXT)	1	
12	843000809	CIRCLIP DIA.8(EXT) TYPE C	2	
13	825120308	O- RING (PLUNGER SHAFT)	1	
14	120170018	HOSE CLIP - CLUTCH COVER BELOW	1	
15	127185012	SPRING - CLUTCH COVER	1	
16	127471019	BRACKET CLUTCH CABLE GUIDE	1	
17	825123207	O - RING CLUTCH COVER	1	
18	B019220	O- RING (PLUNGER SHAFT)	1	

PARTS INDEX

ape' 501 (5 Seater)

PART NO	BLOCK	PART NO	BLOCK	PART NO	BLOCK
-	PLATE-27	007608	PLATE-31	020105	PLATE-21
002383	PLATE-26	008080	PLATE-28	020105	PLATE-26
002438	PLATE-31	008080	PLATE-34	020105	PLATE-27
003054	PLATE-28	008451	PLATE-33	020105	PLATE-31
003054	PLATE-33	008771	PLATE-30	020105	PLATE-32
003054	PLATE-33	013880	PLATE-20	020105	PLATE-33
003055	PLATE-26	013880	PLATE-27	020105	PLATE-33
003055	PLATE-26	013880	PLATE-27	020105	PLATE-33
003055	PLATE-33	013880	PLATE-27	020105	PLATE-33
003055	PLATE-33	013880	PLATE-34	020106	PLATE-20
003055	PLATE-33	015727	PLATE-33	020106	PLATE-20
003055	PLATE-34	015900	PLATE-34	020106	PLATE-25
003056	PLATE-36	016406	PLATE-36	020106	PLATE-27
003056	PLATE-36	016406	PLATE-36	020106	PLATE-27
003056	PLATE-20	016406	PLATE-20	020106	PLATE-31
003056	PLATE-21	016406	PLATE-20	020106	PLATE-33
003056	PLATE-23	016406	PLATE-21	020106	PLATE-33
003056	PLATE-25	016406	PLATE-21	020106	PLATE-34
003056	PLATE-33	016406	PLATE-23	020106	PLATE-34
003056	PLATE-33	016406	PLATE-25	020108	PLATE-26
003056	PLATE-34	016406	PLATE-27	020108	PLATE-26
003058	PLATE-36	016406	PLATE-27	020108	PLATE-26
003058	PLATE-26	016406	PLATE-31	020108	PLATE-27
003058	PLATE-27	016406	PLATE-33	020108	PLATE-32
003058	PLATE-32	016406	PLATE-33	020108	PLATE-32
003058	PLATE-33	016406	PLATE-34	020108	PLATE-33
003068	PLATE-29	016408	PLATE-26	031058	PLATE-33
005969	PLATE-32	016408	PLATE-26	031090	PLATE-20
006066	PLATE-29	016408	PLATE-26	078307	PLATE-27
006066	PLATE-30	016408	PLATE-27	078307	PLATE-34
006078	PLATE-26	016408	PLATE-27	105392	PLATE-27
006078	PLATE-26	016408	PLATE-31	107718	PLATE-30
006078	PLATE-33	016408	PLATE-32	107732	PLATE-30
006078	PLATE-33	016408	PLATE-32	107827	PLATE-29
006125	PLATE-31	016408	PLATE-32	107870	PLATE-29
006173	PLATE-32	016408	PLATE-33	107870	PLATE-30
006173	PLATE-32	016408	PLATE-33	107871	PLATE-30
006411	PLATE-32	016410	PLATE-26	108215	PLATE-29
006414	PLATE-32	016410	PLATE-26	108215	PLATE-30
006650	PLATE-29	016410	PLATE-29	108785	PLATE-32
006733	PLATE-30	016410	PLATE-29	108873	PLATE-30
006965	PLATE-33	016410	PLATE-30	108874	PLATE-30
006965	PLATE-33	016410	PLATE-31	109064	PLATE-30

PART NO	BLOCK
109066	PLATE-30
109117	PLATE-30
109227	PLATE-31
109265	PLATE-30
109404	PLATE-31
109635	PLATE-31
109775	PLATE-31
109892	PLATE-29
116088	PLATE-37
116088	PLATE-38
116103	PLATE-27
116971	PLATE-32
118806	PLATE-31
119181	PLATE-31
119278	PLATE-31
119278	PLATE-32
119928	PLATE-31
120164019	PLATE-24.B
120164019	PLATE-25
120170018	PLATE-24.B
120170018	PLATE-25
120204015R	PLATE-21
120204015R	PLATE-22
120205019	PLATE-22
120212012	PLATE-21
120238016	PLATE-25
12136	PLATE-21
12136	PLATE-33
12138	PLATE-31
12138	PLATE-35
122032014	PLATE-22
125181	PLATE-31
125289	PLATE-30
12536	PLATE-37
12536	PLATE-38
12536	PLATE-33
12546	PLATE-33
125998	PLATE-27
125998	PLATE-27
126003011	PLATE-23
126004015	PLATE-23
126021013	PLATE-23
126022017	PLATE-23
126052012	PLATE-23
126053016	PLATE-23
126054010	PLATE-23
126060019	PLATE-23
126902	PLATE-31
127012019	PLATE-24.B
127012019	PLATE-25
127013013	PLATE-24.B
127013013	PLATE-25
127102010	PLATE-21
127185012	PLATE-24.B
127185012	PLATE-25
127303016R	PLATE-22
127306513R	PLATE-22
127451019R	PLATE-22
127451	PLATE-31
127460010	PLATE-24.B
127460010	PLATE-25
127471019	PLATE-24.B
127471019	PLATE-25
127530011	PLATE-25
12761	PLATE-32
12761	PLATE-35
127640012P	PLATE-23
127641016	PLATE-23
127692015	PLATE-25
127693019	PLATE-25
127754019	PLATE-25
127757011	PLATE-25
127758015	PLATE-25
12790	PLATE-29
127911019	PLATE-21
127912013	PLATE-21
127927R	PLATE-30
128009	PLATE-27
128010	PLATE-27
128081017	PLATE-23
128633	PLATE-29
129001014	PLATE-21
129011019	PLATE-25
129012013	PLATE-25
136426	PLATE-29
136434	PLATE-30
136451	PLATE-29
136888	PLATE-29
136916	PLATE-26
137026	PLATE-29
137235	PLATE-30
13812	PLATE-32
138237	PLATE-32
13861	PLATE-27
13880	PLATE-35
140728	PLATE-32
141925	PLATE-31
142424	PLATE-27
14628	PLATE-35
14628	PLATE-35
150579	PLATE-30
150915R	PLATE-33
15235	PLATE-26
152580	PLATE-29
152580	PLATE-30
15335	PLATE-26
15478	PLATE-26
15478	PLATE-31
15594	PLATE-29
15618	PLATE-31
15640	PLATE-33
157103	PLATE-29
157716	PLATE-34
15900	PLATE-35
15911	PLATE-26
15911	PLATE-33
15911	PLATE-35
15911	PLATE-35
15996	PLATE-33
15996	PLATE-35
16319	PLATE-31
16404	PLATE-35
16405	PLATE-26
16405	PLATE-27
16405	PLATE-27
16405	PLATE-27
16405	PLATE-33
16406	PLATE-24.B
16406	PLATE-35

PART NO	BLOCK	PART NO	BLOCK	PART NO	BLOCK
16408	PLATE-35	1A001457	PLATE-25	20110	PLATE-31
16408	PLATE-35	1A005414R	PLATE-25	20359	PLATE-29
16408	PLATE-35	1A009578R	PLATE-22	21216	PLATE-30
16408	PLATE-35	1A010094	PLATE-21	219528	PLATE-34
16408	PLATE-35	1A010698R	PLATE-22	226596	PLATE-29
16408	PLATE-35	1A010700R	PLATE-22	226661	PLATE-29
164906	PLATE-31	1A011547R	PLATE-25	226662	PLATE-29
16603	PLATE-27	1A011662	PLATE-25	229524	PLATE-32
16603	PLATE-27	1A014753	PLATE-24.B	231370	PLATE-26
16620	PLATE-31	1A014760	PLATE-24.B	231370	PLATE-29
16626	PLATE-31	1A015065	PLATE-24.A	231370	PLATE-29
16670	PLATE-35	1A016604	PLATE-21	231370	PLATE-29
16670	PLATE-35	1A016964	PLATE-21	237246	PLATE-29
178610	PLATE-26	1A017147	PLATE-24.A	243303R	PLATE-29
178804	PLATE-37	1A017153	PLATE-24.A	245038	PLATE-37
178804	PLATE-38	1A017154	PLATE-24.A	245038	PLATE-38
178805	PLATE-37	1A017155	PLATE-24.A	265091P	PLATE-26
178805	PLATE-38	1A017156	PLATE-24.A	265091P	PLATE-26
178806	PLATE-37	1A017157	PLATE-24.A	267064	PLATE-29
178806	PLATE-38	1A017158	PLATE-24.A	267065	PLATE-26
178807	PLATE-37	1A017159	PLATE-24.A	267065	PLATE-29
178807	PLATE-38	1A017160	PLATE-24.A	267068	PLATE-29
178808	PLATE-37	1A017161	PLATE-24.A	272178	PLATE-26
178808	PLATE-38	1A017162	PLATE-24.A	272178	PLATE-26
178818	PLATE-38	1A017163	PLATE-24.A	286328	PLATE-26
178819	PLATE-38	1F000754	PLATE-25	286328	PLATE-26
178820	PLATE-38	1F000755	PLATE-25	286328	PLATE-26
178821	PLATE-38	1F000755	PLATE-25	286328	PLATE-29
178823	PLATE-37	1F0007564	PLATE-21	286406	PLATE-25
178823	PLATE-38	1F000830	PLATE-24.B	2916710603	PLATE-18
178824	PLATE-37	1F000832	PLATE-25	30072	PLATE-27
178824	PLATE-38	20104	PLATE-35	30074	PLATE-35
179056	PLATE-37	20106	PLATE-24.B	30074	PLATE-35
179056	PLATE-38	20106	PLATE-35	30077	PLATE-31
179057	PLATE-38	20106	PLATE-35	30103	PLATE-31
180431	PLATE-30	20108	PLATE-35	30209R	PLATE-22
181746	PLATE-33	20108	PLATE-35	30209R	PLATE-30
190255	PLATE-27	20108	PLATE-35	3054	PLATE-35
190255	PLATE-27	20108	PLATE-35	3056	PLATE-24.B
196302	PLATE-29	20110	PLATE-26	3056	PLATE-35
197071	PLATE-31	20110	PLATE-26	3056	PLATE-35
197071	PLATE-31	20110	PLATE-29	3057	PLATE-35
1A001455	PLATE-25	20110	PLATE-30	3058	PLATE-35

PART NO	BLOCK	PART NO	BLOCK	PART NO	BLOCK
3058	PLATE-35	567524	PLATE-26	587533	PLATE-26
3058	PLATE-35	567534	PLATE-35	587616	PLATE-37
31054	PLATE-27	567535	PLATE-35	587617	PLATE-29
31056	PLATE-33	567593	PLATE-34	587624R	PLATE-26
31057	PLATE-33	567690	PLATE-32	587624R	PLATE-30
31088	PLATE-36	567700	PLATE-33	587645	PLATE-32
31088	PLATE-36	567706	PLATE-33	587650R	PLATE-33
31088	PLATE-27	567732	PLATE-35	587662	PLATE-27
31088	PLATE-27	567741	PLATE-21	587702	PLATE-32
31088	PLATE-33	567746G1	PLATE-32	587763	PLATE-27
31088	PLATE-35	567878R	PLATE-27	587773	PLATE-32
31089	PLATE-31	567898	PLATE-32	587803	PLATE-31
31089	PLATE-34	567899	PLATE-32	587829	PLATE-30
31090	PLATE-35	567920	PLATE-32	587902	PLATE-31
31092	PLATE-24.B	567990	PLATE-30	587904	PLATE-31
31092	PLATE-25	567991	PLATE-30	587907	PLATE-35
31092	PLATE-27	567992	PLATE-30	587928	PLATE-32
31092	PLATE-35	567993	PLATE-30	587948	PLATE-35
31116	PLATE-36	568095	PLATE-30	587962	PLATE-35
31116	PLATE-26	568107	PLATE-35	602120	PLATE-38
31116	PLATE-31	568131	PLATE-27	602120	PLATE-29
31116	PLATE-33	568135	PLATE-35	602123	PLATE-38
31116	PLATE-35	568140	PLATE-26	602123	PLATE-29
31116	PLATE-35	568154	PLATE-27	602497	PLATE-37
31118	PLATE-26	568161	PLATE-32	602497	PLATE-38
31118	PLATE-32	568260	PLATE-26	604502	PLATE-32
31118	PLATE-35	568275	PLATE-35	604506	PLATE-33
31119	PLATE-26	568325	PLATE-35	604508	PLATE-31
31119	PLATE-27	568671	PLATE-28	604535P	PLATE-29
31119	PLATE-35	568682	PLATE-27	604553	PLATE-20
31122	PLATE-32	568689	PLATE-26	604557	PLATE-33
31154	PLATE-26	568714	PLATE-33	604560	PLATE-23
31159	PLATE-26	568737	PLATE-32	604603	PLATE-27
31159	PLATE-29	568750	PLATE-33	604606	PLATE-26
48197	PLATE-30	569150	PLATE-30	604606	PLATE-27
520221019R	PLATE-21	569165	PLATE-33	604715	PLATE-31
523011013R	PLATE-22	569166	PLATE-33	604716	PLATE-31
523021018	PLATE-22	569177	PLATE-33	604717	PLATE-32
566545	PLATE-30	569182	PLATE-26	604756	PLATE-20
567461	PLATE-32	569244	PLATE-26	604758	PLATE-30
567473	PLATE-30	569246RP	PLATE-30	604758	PLATE-30
567484	PLATE-36	569255	PLATE-30	604759	PLATE-30
567498R	PLATE-33	569377	PLATE-26	604760	PLATE-32

PART NO	BLOCK	PART NO	BLOCK	PART NO	BLOCK
604973	PLATE-20	660109	PLATE-33	77055	PLATE-33
60565	PLATE-31	660168	PLATE-34	807000647	PLATE-21
611621	PLATE-20	660340	PLATE-31	811081025	PLATE-21
616541	PLATE-37	660341	PLATE-32	819064530	PLATE-21
616541	PLATE-30	660349	PLATE-31	819064530	PLATE-23
632148	PLATE-38	660350	PLATE-31	822031942	PLATE-25
632148	PLATE-38	660356	PLATE-32	825080209	PLATE-23
632158	PLATE-31	660358	PLATE-32	825120308	PLATE-24.B
632247	PLATE-26	660457R	PLATE-26	825123207	PLATE-24.B
632299	PLATE-26	660931	PLATE-29	825123207	PLATE-25
632412	PLATE-20	660931	PLATE-30	825420215	PLATE-21
632413	PLATE-20	661231	PLATE-30	841005207	PLATE-22
632995	PLATE-33	661231	PLATE-33	842001507	PLATE-22
63440	PLATE-37	661262	PLATE-35	842001600	PLATE-24.B
63440	PLATE-38	661267	PLATE-29	842001600	PLATE-25
643502	PLATE-35	661282	PLATE-29	842002501	PLATE-22
643661	PLATE-35	661493	PLATE-35	842004808	PLATE-22
643691	PLATE-28	661510R	PLATE-28	843000809	PLATE-24.B
643691	PLATE-28	661627	PLATE-27	843000809	PLATE-25
643692	PLATE-26	661627	PLATE-27	843000809	PLATE-32
643704R	PLATE-33	661925	PLATE-28	8432	PLATE-35
643705R	PLATE-33	661925	PLATE-33	8432	PLATE-35
643711R	PLATE-26	662422	PLATE-30	87067	PLATE-30
643741	PLATE-29	662423	PLATE-30	880255211R	PLATE-22
643752	PLATE-35	6B000021BL	PLATE-35	884222808	PLATE-22
643772R	PLATE-30	6B000021BW	PLATE-35	9000	PLATE-35
644812	PLATE-26	6B000021BY	PLATE-35	920083	PLATE-33
644812	PLATE-32	6B000021CB	PLATE-35	920084	PLATE-33
644813	PLATE-26	6B000021EG	PLATE-35	920087	PLATE-14
644813	PLATE-32	6B000021GY	PLATE-35	920105	PLATE-14
644838R	PLATE-36	6B000131	PLATE-35	925501	PLATE-37
644839R	PLATE-26	6B000132	PLATE-35	925501	PLATE-38
644897	PLATE-29	6B000222	PLATE-35	925521	PLATE-37
644898	PLATE-29	6C000060	PLATE-29	925567	PLATE-33
652124	PLATE-25	6C000060	PLATE-29	925571	PLATE-33
652356	PLATE-37	6D000210	PLATE-36	925573	PLATE-38
652360	PLATE-38	6G000028	PLATE-35	925574	PLATE-38
652361	PLATE-38	71633	PLATE-33	925581	PLATE-33
652520	PLATE-29	71633	PLATE-33	925581	PLATE-34
652521	PLATE-30	74414	PLATE-29	925584	PLATE-33
658810	PLATE-34	74414	PLATE-30	925585	PLATE-33
659791R	PLATE-36	74521	PLATE-30	925589	PLATE-33
659805	PLATE-31	75708	PLATE-30	925603	PLATE-33

PART NO	BLOCK	PART NO	BLOCK	PART NO	BLOCK
940003	PLATE-30	B042620	PLATE-23	B076304	PLATE-33
940004	PLATE-37	B042794	PLATE-32	B076306	PLATE-31
940005	PLATE-38	B042798	PLATE-21	B076307	PLATE-31
940006	PLATE-38	B042799	PLATE-21	B076455	PLATE-32
940048	PLATE-4	B073274	PLATE-35	B076536	PLATE-20
940048	PLATE-5	B073275	PLATE-35	B076605	PLATE-34
940048	PLATE-8	B073478	PLATE-28	B076606	PLATE-34
940094	PLATE-14	B073479	PLATE-28	B076801	PLATE-27
9451035101	PLATE-18	B073481	PLATE-28	B076801	PLATE-34
9451037405	PLATE-18	B073600	PLATE-33	B076802	PLATE-27
97756	PLATE-31	B073601	PLATE-27	B076802	PLATE-34
B001186ED	PLATE-35	B073602ED	PLATE-27	B076808R	PLATE-31
B001386	PLATE-27	B073626	PLATE-27	B076830	PLATE-21
B001501	PLATE-21	B073685	PLATE-33	B076859	PLATE-30
B001518	PLATE-31	B073809	PLATE-28	B076873SP	PLATE-30
B001561	PLATE-30	B073810	PLATE-28	B076880	PLATE-32
B001648	PLATE-26	B073812	PLATE-28	B077154	PLATE-32
B001844	PLATE-21	B073814	PLATE-28	B077155	PLATE-32
B002573	PLATE-33	B073815	PLATE-28	B077156	PLATE-32
B003056	PLATE-33	B073816	PLATE-28	B077526BL	PLATE-35
B003228	PLATE-30	B073850R	PLATE-33	B077526BW	PLATE-35
B003784	PLATE-37	B073953	PLATE-34	B077526EG	PLATE-35
B003784	PLATE-38	B074033	PLATE-33	B077526GY	PLATE-35
B003924	PLATE-22	B074033	PLATE-34	B077535	PLATE-28
B009290	PLATE-20	B074170	PLATE-34	B077559	PLATE-35
B009701	PLATE-35	B074171	PLATE-34	B077597	PLATE-35
B019220	PLATE-24.B	B074184R	PLATE-31	B077719	PLATE-27
B019220	PLATE-25	B074262	PLATE-28	B077736	PLATE-35
B023727R	PLATE-33	B074275	PLATE-28	B077742	PLATE-35
B023890	PLATE-25	B074539	PLATE-34	B077750BL	PLATE-27
B024169	PLATE-28	B074637	PLATE-27	B077750BW	PLATE-27
B024170	PLATE-27	B074905	PLATE-28	B077750EG	PLATE-27
B024373	PLATE-29	B075178R	PLATE-36	B077750GY	PLATE-27
B024379	PLATE-25	B075483	PLATE-20	B077865	PLATE-34
B024379	PLATE-31	B075687ED	PLATE-31	B077866	PLATE-34
B024474	PLATE-27	B075974	PLATE-27	B078043	PLATE-27
B024501	PLATE-35	B075974	PLATE-34	B078070	PLATE-27
B024532	PLATE-33	B075999	PLATE-34	B078071	PLATE-27
B024614	PLATE-26	B076000	PLATE-34	B078205R	PLATE-14
B041600	PLATE-31	B076001	PLATE-34	B078375	PLATE-27
B041600	PLATE-31	B076120	PLATE-34	B078604	PLATE-29
B042317	PLATE-32	B076191	PLATE-34	B078865	PLATE-27
B042612	PLATE-27	B076303	PLATE-33	B078925	PLATE-35

PART NO	BLOCK	PART NO	BLOCK	PART NO	BLOCK
B079045	PLATE-1	E10A110006	PLATE-11	E10S110001	PLATE-9
B079276	PLATE-35	E10A110007	PLATE-4	E10T070001	PLATE-14
B079401	PLATE-36	E10A120005	PLATE-11	E10T070002	PLATE-14
E03B020001	PLATE-6	E10B120001	PLATE-15	E10T070007	PLATE-14
E03G100001	PLATE-12	E10B120001	PLATE-6	E10T070010	PLATE-14
E03G100003	PLATE-12	E10B120002	PLATE-6	E10T120001	PLATE-18
E03S070003	PLATE-14	E10G030001	PLATE-12	E10T120010	PLATE-18
E07500428	PLATE-11	E10G050005	PLATE-39	E10T120015	PLATE-18
E07500819	PLATE-18	E10G050006	PLATE-39	E10T120016	PLATE-18
E075028010	PLATE-14	E10G070001	PLATE-14	E1177001	PLATE-7
E07502803	PLATE-14	E10G070007	PLATE-14	E1324010	PLATE-12
E07502804	PLATE-5	E10G070014	PLATE-14	E1441570056	PLATE-18
E07502804	PLATE-5	E10G070016	PLATE-14	E1756504	PLATE-10
E07502810	PLATE-14	E10G090002	PLATE-2	E1756504	PLATE-11
E07502810	PLATE-19	E10G110005	PLATE-14	E1756504	PLATE-11
E07502811	PLATE-11	E10G110015	PLATE-19	E1756507	PLATE-12
E07502812	PLATE-14	E10G110020	PLATE-4	E1756507	PLATE-2
E07502812	PLATE-14	E10G110026	PLATE-12	E1756507	PLATE-12
E07502812	PLATE-14	E10G120003	PLATE-16	E1756507	PLATE-16
E07502813	PLATE-11	E10G120004	PLATE-15	E18A060006	PLATE-39
E07502813	PLATE-11	E10G120009	PLATE-19	E18A060006	PLATE-6
E07506189	PLATE-18	E10G120012	PLATE-18	E1965140021	PLATE-9
E105324008	PLATE-11	E10G120069	PLATE-16	E1965140021	PLATE-39
E105324008	PLATE-11	E10G120070	PLATE-16	E1965755128	PLATE-9
E105324008	PLATE-11	E10G130001	PLATE-11	E1965755128	PLATE-39
E105324008	PLATE-17	E10G130005	PLATE-12	E1967625270	PLATE-9
E10A010006	PLATE-2	E10G130018	PLATE-12	E1967980064	PLATE-9
E10A020002	PLATE-6	E10G140001	PLATE-12	E1967980064	PLATE-39
E10A030001	PLATE-12	E10G140041	PLATE-14	E1969695019	PLATE-9
E10A050001	PLATE-3	E10M030001	PLATE-12	E1969695019	PLATE-39
E10A050005	PLATE-39	E10M030002	PLATE-39	E200190002	PLATE-18
E10A050005	PLATE-39	E10M030002	PLATE-3	E200467003	PLATE-18
E10A050006	PLATE-39	E10M030003	PLATE-39	E200467003	PLATE-7
E10A050006	PLATE-39	E10M070001	PLATE-14	E200467021	PLATE-7
E10A050007	PLATE-39	E10M070002	PLATE-14	E202756511	PLATE-10
E10A050007	PLATE-3	E10M110002	PLATE-9	E2410508007	PLATE-18
E10A060001	PLATE-39	E10M110005	PLATE-9	E250467014	PLATE-8
E10A060006	PLATE-17	E10M120001	PLATE-16	E250755504	PLATE-10
E10A060009	PLATE-39	E10M120003	PLATE-15	E250755504	PLATE-10
E10A060009	PLATE-17	E10M120004	PLATE-15	E250755507	PLATE-4
E10A060010	PLATE-17	E10M120019	PLATE-16	E260120016	PLATE-7
E10A070003	PLATE-14	E10S070002	PLATE-14	E260467001	PLATE-6
E10A110001	PLATE-9	E10S070003	PLATE-14	E260756505	PLATE-12

PART NO	BLOCK	PART NO	BLOCK	PART NO	BLOCK
E260973027	PLATE-7	E43500540	PLATE-2	E43531725	PLATE-12
E264973008	PLATE-10	E43500578	PLATE-5	E43531726	PLATE-12
E26756503	PLATE-12	E43502707	PLATE-17	E43531743	PLATE-12
E268120034	PLATE-6	E43502766	PLATE-39	E43536107	PLATE-6
E270973010	PLATE-11	E43502767	PLATE-39	E43536108	PLATE-6
E271678054	PLATE-2	E43502768	PLATE-39	E43536109	PLATE-6
E276846055	PLATE-2	E43502821	PLATE-14	E45324016	PLATE-2
E27762505	PLATE-11	E43507330	PLATE-17	E45762512	PLATE-12
E283467036	PLATE-19	E43507331	PLATE-39	E47124004	PLATE-17
E2916710602	PLATE-18	E43507331	PLATE-17	E47177007	PLATE-12
E3124017	PLATE-39	E43507359	PLATE-39	E47177007	PLATE-13
E3124017	PLATE-39	E43507359	PLATE-17	E47177007	PLATE-25
E3124017	PLATE-3	E43509046	PLATE-13	E50000114	PLATE-9
E3824509	PLATE-10	E43510715	PLATE-13	E50000164	PLATE-12
E40000549	PLATE-14	E43510791	PLATE-13	E50000421	PLATE-8
E40000565	PLATE-12	E43511440	PLATE-39	E50000437	PLATE-10
E40000687	PLATE-18	E43511440	PLATE-39	E50000452	PLATE-11
E40001773	PLATE-12	E43511440	PLATE-39	E50000475	PLATE-7
E40001816	PLATE-7	E43511440	PLATE-3	E50000506	PLATE-2
E40002263	PLATE-39	E43512266	PLATE-39	E50000506	PLATE-19
E40002263	PLATE-2	E43518358	PLATE-6	E50000506	PLATE-5
E40002264	PLATE-39	E43518363	PLATE-39	E50000613	PLATE-7
E40002265	PLATE-39	E43518363	PLATE-6	E50000901	PLATE-6
E40002266	PLATE-39	E43518650	PLATE-14	E50001213143	PLATE-7
E40002267	PLATE-39	E43518676	PLATE-14	E50002296	PLATE-13
E40002291	PLATE-39	E43520166	PLATE-13	E50002805	PLATE-2
E40002292	PLATE-39	E43520559	PLATE-39	E50002805	PLATE-2
E40002293	PLATE-39	E43520672	PLATE-14	E50002805	PLATE-14
E40002294	PLATE-39	E43521745	PLATE-5	E50002805	PLATE-14
E40002295	PLATE-39	E43522238	PLATE-39	E50002805	PLATE-14
E400051135	PLATE-10	E43522238	PLATE-6	E50002805	PLATE-8
E40005592	PLATE-12	E43522257	PLATE-39	E50005578	PLATE-5
E40006428	PLATE-39	E43525547	PLATE-39	E50005625006	PLATE-7
E40006428	PLATE-17	E43525548	PLATE-39	E50006328	PLATE-5
E40006428	PLATE-17	E43526149	PLATE-14	E50006342	PLATE-6
E40009645	PLATE-11	E43526150	PLATE-14	E50006495029	PLATE-7
E40009648	PLATE-12	E43526171	PLATE-14	E50007626	PLATE-12
E400106100	PLATE-2	E43526174	PLATE-39	E50008099	PLATE-8
E40016141	PLATE-8	E43526174	PLATE-17	E50008883	PLATE-8
E40016143	PLATE-6	E43527184	PLATE-18	E50009205	PLATE-13
E40020135	PLATE-12	E43527185	PLATE-18	E50010103	PLATE-10
E422973030	PLATE-5	E43527721	PLATE-14	E50010157	PLATE-10
E43500539	PLATE-2	E43527721	PLATE-14	E500116011	PLATE-10